产品索引

Products Index

G. MICROMETERS 092

H. DIGITAL INDICATORS..... 112

HAFFMAN
High Precision Tools

让测量更简单

A

数显卡尺类
DIGITAL CALIPERS

诚信为本·科技立业

SINCERITY & TECHNOLOGY

绝对原点数显卡尺
Absolute Digital Caliper

GB/T | S/STL hardened | SPC 数据接口

A

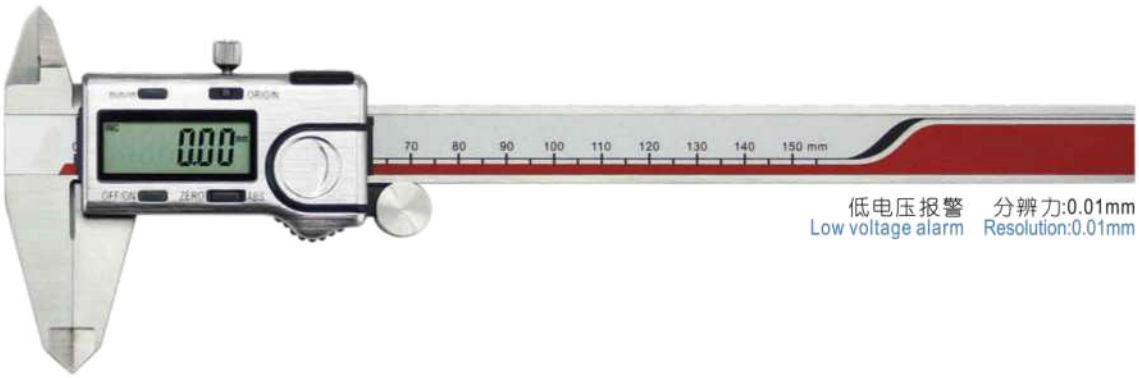

低电压报警 分辨力:0.01mm
Low voltage alarm Resolution:0.01mm

主要特点:

- 可以对所设置的原点位置进行持续跟踪，测量过程中无需反复清零
- 无论何时开机，显示屏都会显示出当前量爪相对于原点的准确位置，以便随时进行测量
- 无响应速度限制，不会产生超速错误
- 任意位置清零，便于相对测量与绝对测量转换
- 任意位置公制与英制转换
- 自动开机(拉动尺框)，自动关机(连续5分钟不使用)
- 功耗低，电池寿命长(≥2.5年)

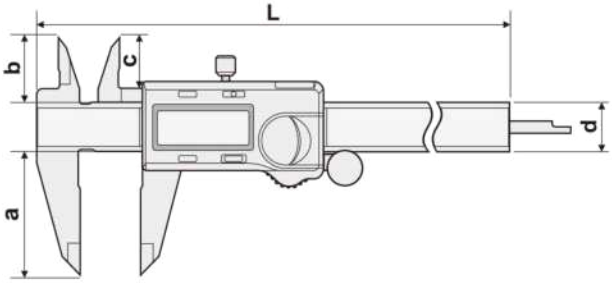

FEATURES

- Origin setting without repeated zero-setting
- Whenever power on, the display will always show the current exact measurement
- No limit for moving speed
- Zero-setting at any position, convenient for relative and absolute measurement conversion
- Mm/inch conversion at any position
- Auto power on(move caliper slider), auto power-off (5 min after using)
- Low power consumption with long life battery (>2.5 years)

货 号 Code NO.	测量范围 Measuring Range mm	精度 Accuracy mm	L mm	a mm	b mm	c mm	d mm
111-101-40	0-150	±0.03	236	40	21	16.5	16
111-102-40	0-200	±0.03	286	50	24	19.5	16
111-103-40	0-300	±0.04	400	60	26	21.5	16

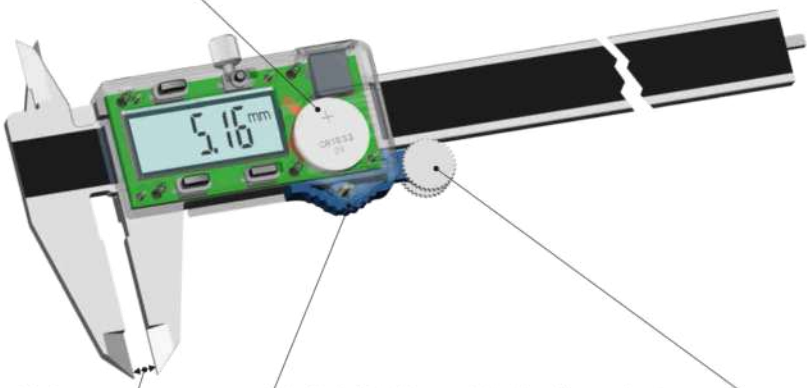

CR1632锂电池经济环保更耐用
Environmental CR1632 Lithium Battery is more durable and convenient

研磨过的量面使用更精确
Grinding measuring faces are more precise

拇指支撑人体工程学设计，使用更舒适
Ergonomic design for pretty and fashion shape

微动滚轮
Fine-adjusted Roller

备注：本大类产品支持客户个性化定制。

蓝牙数显卡尺
Bluetooth Digital Caliper

GB/T S/STL hardened

A

NEW

低电压报警 分辨力:0.01mm
Low voltage alarm Resolution:0.01mm

主要特点:

- 内置蓝牙，可把测量数据传输到手机、平板和电脑
- 两种工作模式: 简易连接软件模式和HID配对键盘模式
- 具备OTA无线升级功能，功能定制升级，无需返厂
- 提供AAR文件中间开发包，支持二次开发
- 开阔地传输距离≤10米 工业环境传输距离≤7米
- 最多同时连接15把卡尺(具体数量视客户端性能而定)
- 超低功耗，实验测试使用大容量物联电池连续自动采集数据能达150万次(频率4次/秒)，手动采集可用6个月(单班制8小时)

FEATURES

- Built-in Bluetooth, measurement data can be transmitted to mobile phones, tablets and computers
- Two working modes: simple connection software mode and HID paired keyboard mode
- With OTA wireless upgrade function, function customization and upgrade, no need to return to the factory
- Provide AAR file intermediate development package, supporting secondary development
- Transmission distance ≤10m(open land); ≤7m(industrial environment)
- At most 15 calipers can be connected at the same time(the specific number depends on the performance of the client)
- Ultra-low power consumption, the experimental test can use the large -capacity IoT battery to continuously and automatically collect data up to 1.5 million times(frequency 4 times/second), and manual collection can be used for 6 months(single shift system 8 hours)

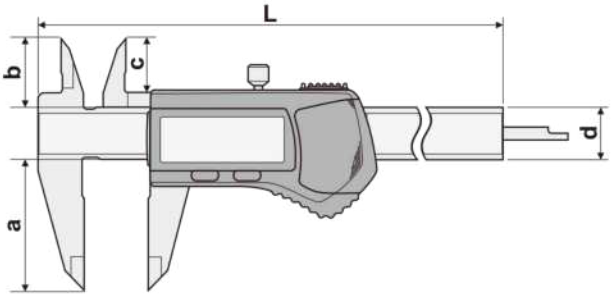

货 号 Code NO.	测量范围 Measuring Range mm	精度 Accuracy mm	L mm	a mm	b mm	c mm	d mm
110-221BT	0-150	±0.02	236	40	21	16.5	16
110-222BT	0-200	±0.02	286	50	24	19.5	16
110-223BT	0-300	±0.03	400	60	26	21.5	16

无线数据连接示意图
Wireless data connection diagram

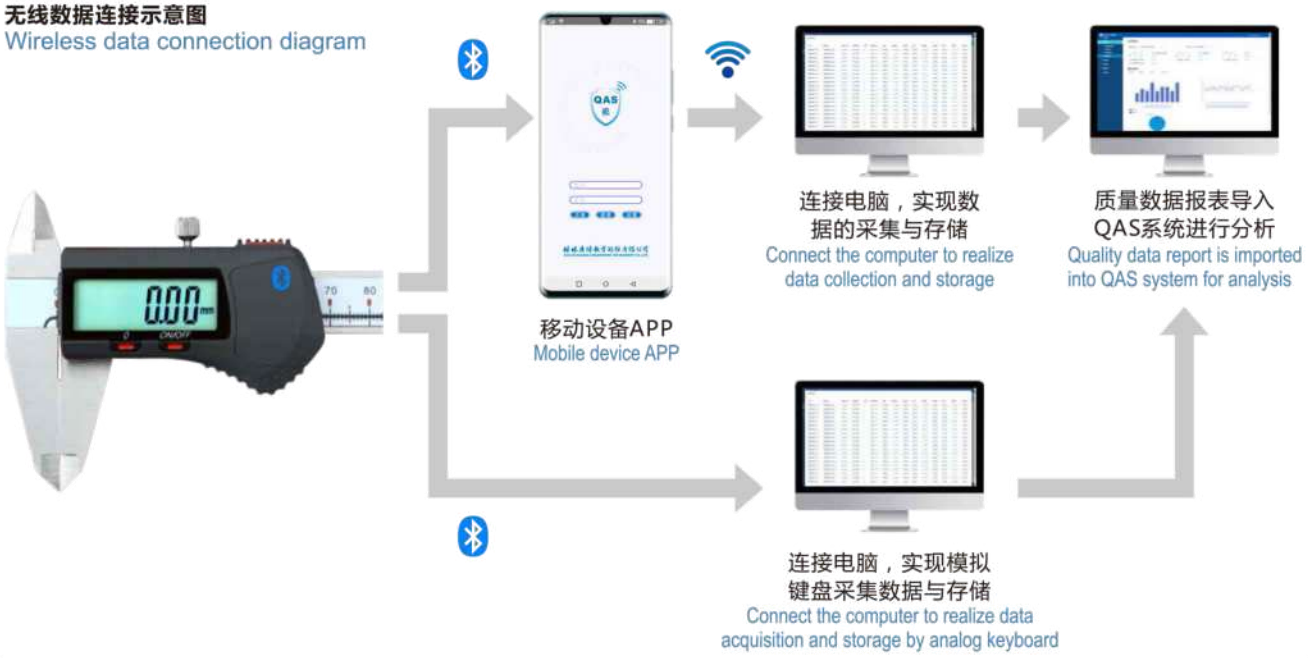

A

1.5V 大屏数显卡尺
1.5V Big Screen Digital Caliper

GB/T | S/STL hardened

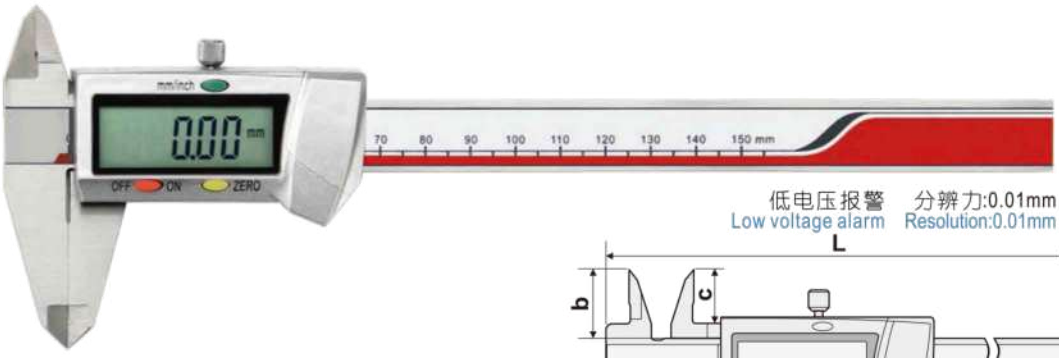

低电压报警 分辨力:0.01mm
Low voltage alarm Resolution:0.01mm

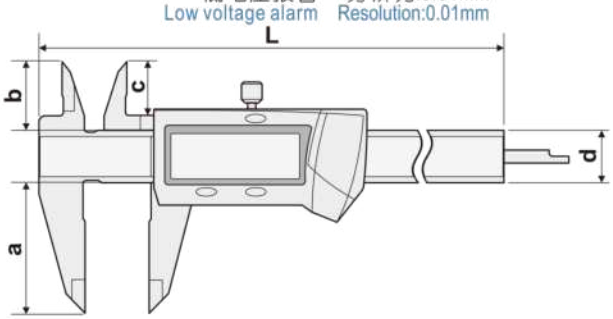

货 号 Code NO.	测量范围 Measuring Range mm	精度 Accuracy mm	L mm	a mm	b mm	c mm	d mm
110-221U	0-150	± 0.03	236	40	21	16.5	16
110-222U	0-200	± 0.03	286	50	24	19.5	16
110-223U	0-300	± 0.04	400	60	26	21.5	16

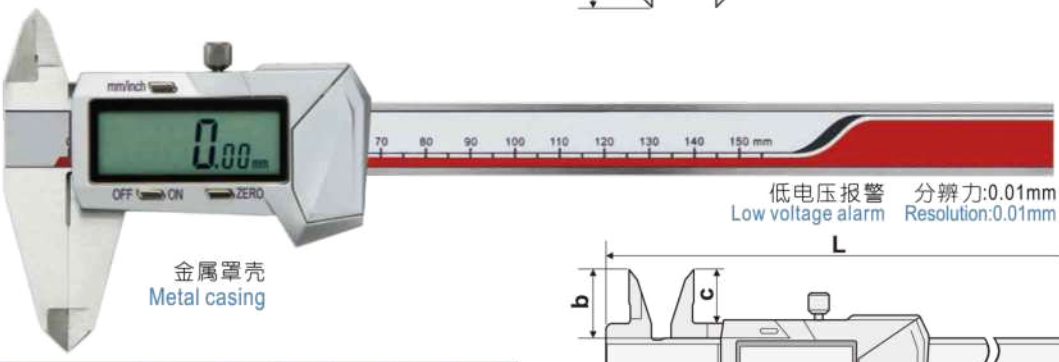

金属罩壳
Metal casing

低电压报警 分辨力:0.01mm
Low voltage alarm Resolution:0.01mm

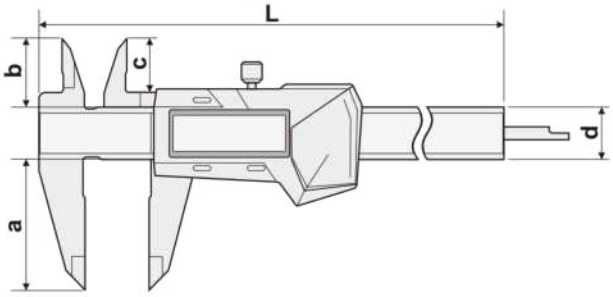

货 号 Code NO.	测量范围 Measuring Range mm	精度 Accuracy mm	L mm	a mm	b mm	c mm	d mm
110-221GD	0-150	± 0.03	236	40	21	16.5	16
110-222GD	0-200	± 0.03	286	50	24	19.5	16
110-223GD	0-300	± 0.04	400	60	26	21.5	16

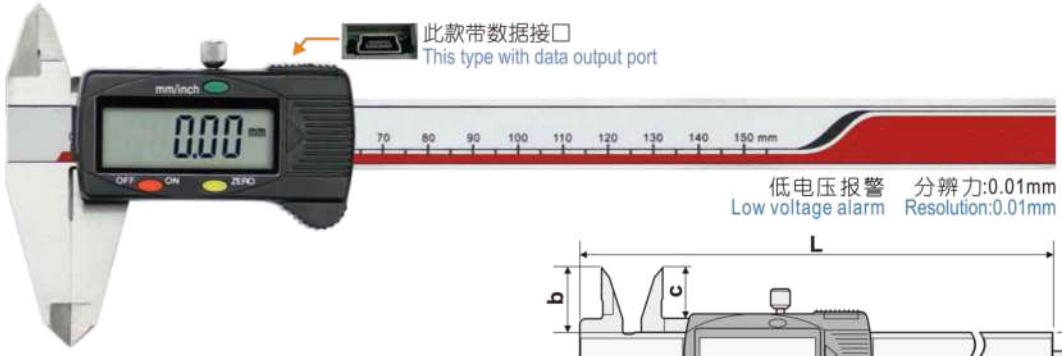

此款带数据接口
This type with data output port

低电压报警 分辨力:0.01mm
Low voltage alarm Resolution:0.01mm

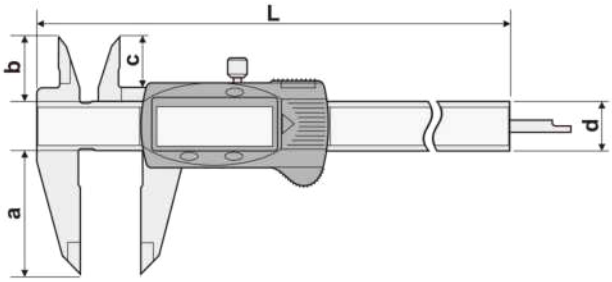

货 号 Code NO.	测量范围 Measuring Range mm	精度 Accuracy mm	L mm	a mm	b mm	c mm	d mm
110-221	0-150	± 0.03	236	40	21	16.5	16
110-222	0-200	± 0.03	286	50	24	19.5	16
110-223	0-300	± 0.04	400	60	26	21.5	16

主要特点:
- 大屏显示，方便读数
- 任意位置清零，便于相对测量与绝对测量转换
- 任意位置公制与英制转换

FEATURES
- Big display screen for easy to read
- Zero-setting at any position, convenient for relative and absolute measure conversion
- Mm/inch conversion at any position

A

3V 锂电池数显卡尺
3V Lithium Battery Digital Caliper

GB/T | S/STL hardened

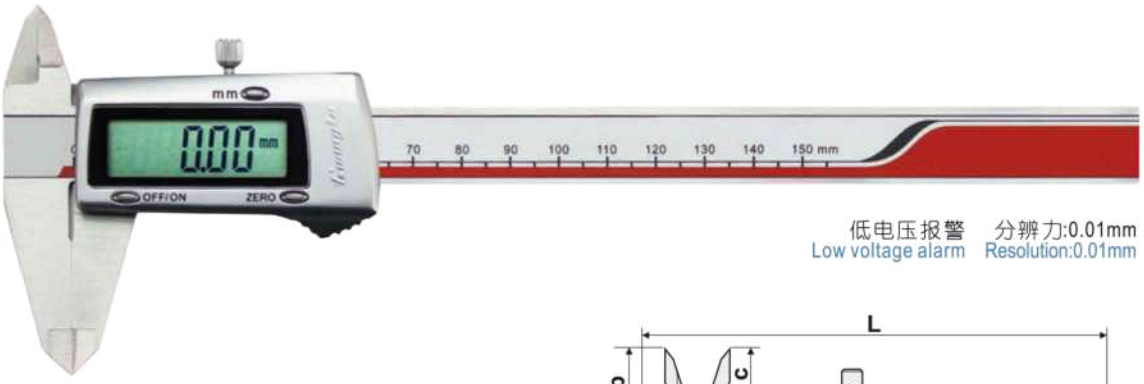

低电压报警 分辨力:0.01mm
Low voltage alarm Resolution:0.01mm

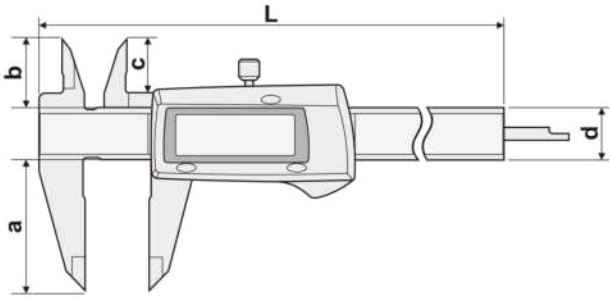

主要特点:
- 使用大容量3V锂电池，电池更耐用，更环保
- 任意位置清零，便于相对测量与绝对测量转换
- 任意位置公制与英制转换

FEATURES
- Long life 3V lithium battery, more environmental
- Zero-setting at any position, convenient for relative and absolute measure conversion
- Mm/inch conversion at any position

货 号 Code NO.	测量范围 Measuring Range mm	精度 Accuracy mm	L mm	a mm	b mm	c mm	d mm
110-221V-10G	0-150	±0.03	236	40	21	16.5	16
110-222V-10G	0-200	±0.03	286	50	24	19.5	16
110-223V-10G	0-300	±0.04	400	60	26	21.5	16

全屏数显卡尺
Full Screen Digital Caliper

GB/T | S/STL hardened | SPC 数据接口

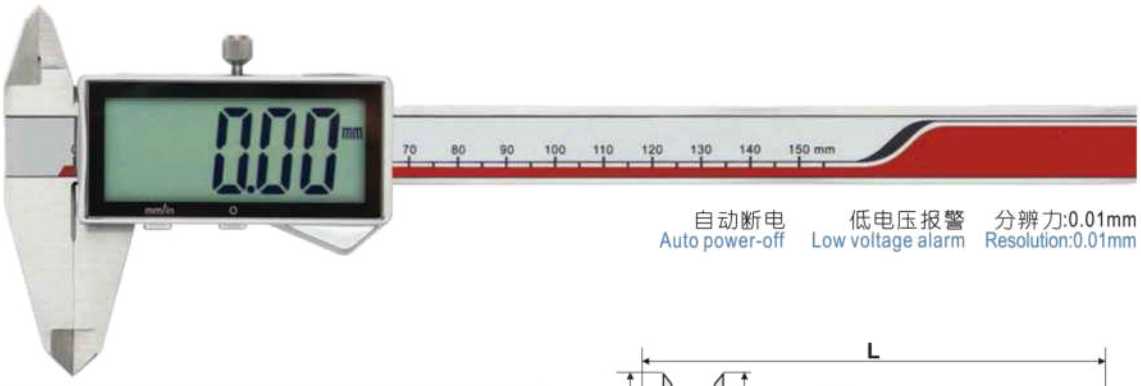

自动断电 低电压报警 分辨力:0.01mm
Auto power-off Low voltage alarm Resolution:0.01mm

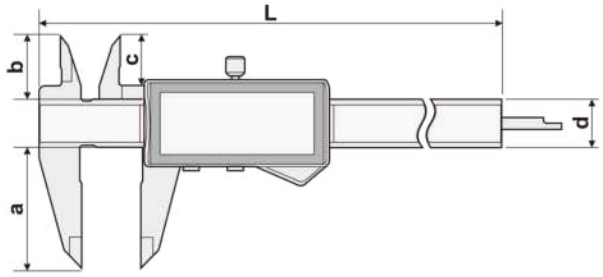

主要特点:
- 使用大容量3V锂电池，电池更耐用，更环保
- 全屏幕显示，方便读数
- 任意位置清零，便于相对测量与绝对测量转换
- 任意位置公制与英制转换

FEATURES
- Long life 3V lithium battery, more environmental
- Full display screen for easy to read
- Zero-setting at any position, convenient for relative and absolute measure conversion
- Mm/inch conversion at any position

货 号 Code NO.	测量范围 Measuring Range mm	精度 Accuracy mm	L mm	a mm	b mm	c mm	d mm
110-221GP	0-150	±0.03	236	40	21	16.5	16
110-222GP	0-200	±0.03	286	50	24	19.5	16
110-223GP	0-300	±0.04	400	60	26	21.5	16

A

袖珍数显卡尺
Mini Digital Caliper

GB/T | S/STL hardened | SPC 数据接口

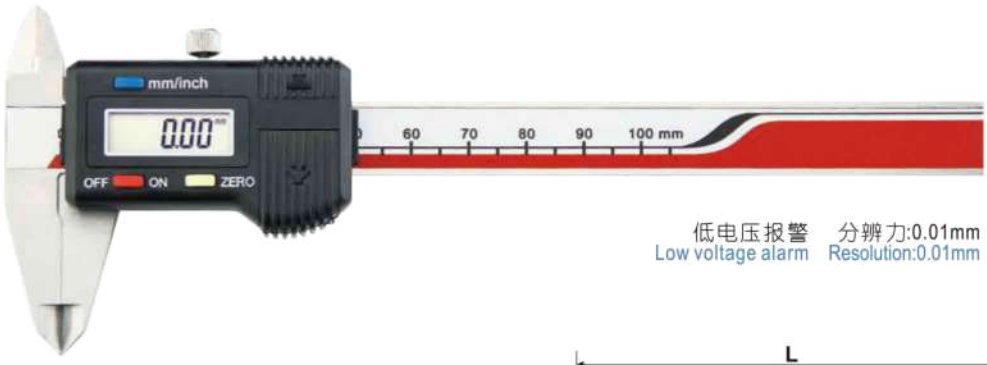

低电压报警 分辨力:0.01mm
Low voltage alarm Resolution:0.01mm

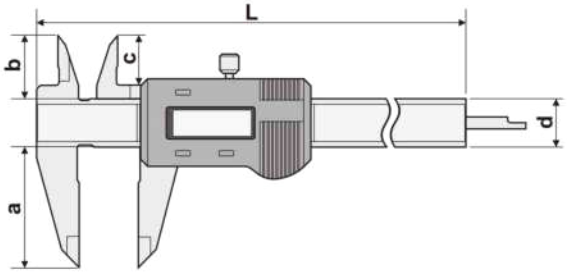

主要特点:
- 可带滚轮
- 任意位置清零，便于相对测量与绝对测量转换
- 任意位置公制与英制转换

FEATURES
- A thumb roller is optional
- Zero-setting at any position, convenient for relative and absolute measure conversion
- Mm/inch conversion at any position

货 号 Code NO.	测量范围 Measuring Range mm	精度 Accuracy mm	L mm	a mm	b mm	c mm	d mm
111-075	0-75	±0.03	145	30.5	17	12.5	13
111-100	0-100	±0.03	170	30.5	17	12.5	13

IP54 防水数显卡尺
Digital Caliper IP54 Class

GB/T | S/STL hardened

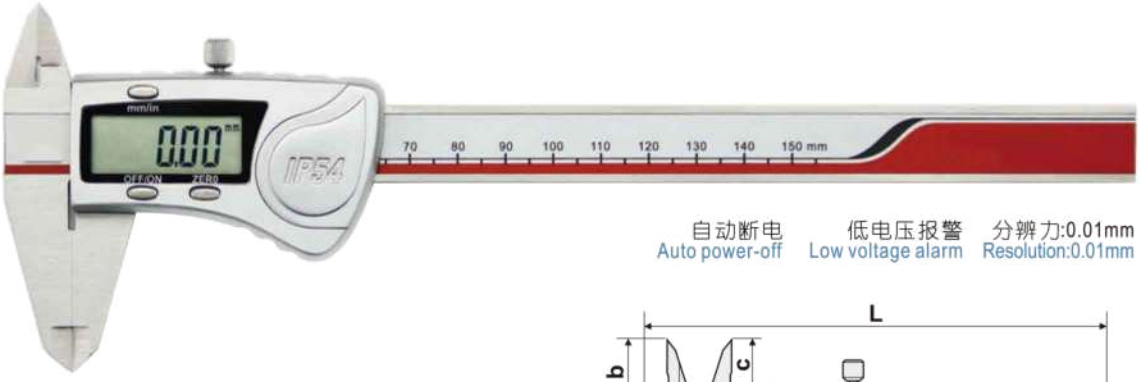

自动断电 低电压报警 分辨力:0.01mm
Auto power-off Low voltage alarm Resolution:0.01mm

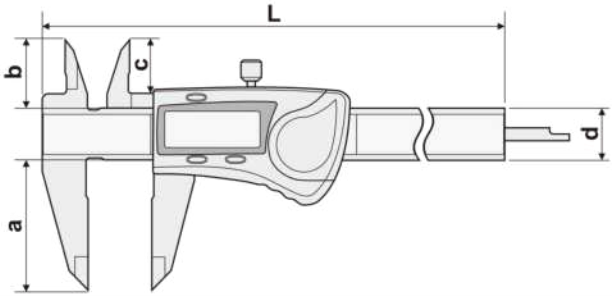

主要特点:
- 防护等级达到IP54，具有一定的防水、油、尘能力
- 任意位置清零，便于相对测量与绝对测量转换
- 任意位置公制与英制转换

FEATURES
- IP54 protection level to against coolant liquid, water, oil and dust
- Zero-setting at any position, convenient for relative and absolute measure conversion
- Mm/inch conversion at any position

货 号 Code NO.	测量范围 Measuring Range mm	精度 Accuracy mm	L mm	a mm	b mm	c mm	d mm
111-801G	0-150	±0.03	236	40	21	16.5	16
111-802G	0-200	±0.03	286	50	24	19.5	16
111-803G	0-300	±0.04	400	60	26	21.5	16

IP66 防水数显卡尺

Digital Caliper IP66 Class

GB/T | S/STL hardened

A

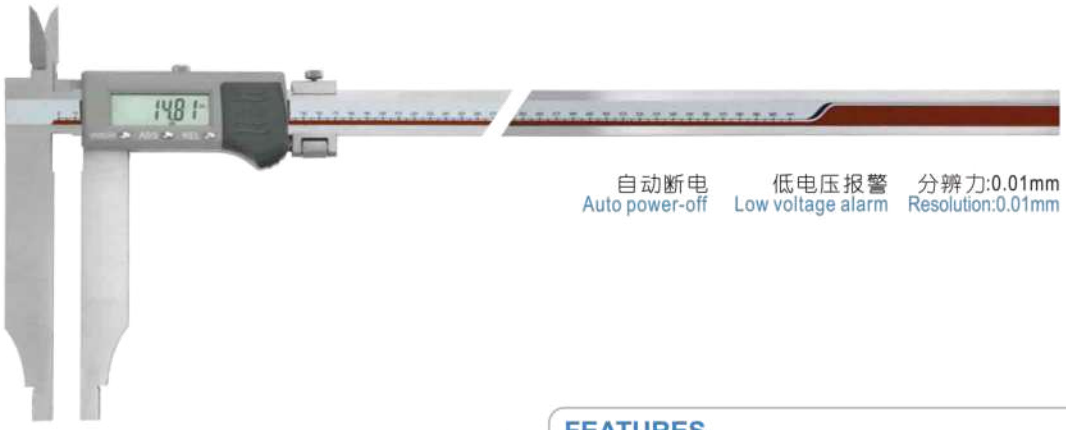

自动断电 Auto power-off　低电压报警 Low voltage alarm　分辨力:0.01mm Resolution:0.01mm

主要特点:

- 防护等级达到IP66，可在一定压力的冷却液、水、油喷射环境中使用
- 任意位置清零，便于相对测量与绝对测量转换
- 任意位置公制与英制转换
- 带预置数功能
- 带有微调装置

FEATURES

- IP66 protection level to against coolant liquid, water, oil and dust
- Zero-setting at any position, convenient for relative and absolute measure conversion
- Mm/inch conversion at any position
- Preset any reading at any position
- With fine-adjustment carriage

货 号 Code NO.	测量范围 Measuring Range mm	精度 Accuracy mm	重量 Weight kg	a mm	b mm	c mm	d mm	e mm	f mm
111-604-30	0-500	±0.05	1.0	100	45	39	24	10	15
111-604-30-1	0-500	±0.05	1.1	150	45	39	24	10	15
111-604-30-2	0-500	±0.07	1.2	200	45	39	24	10	15
111-605-30	0-600	±0.05	1.2	100	45	39	24	10	15
111-605-30-1	0-600	±0.05	1.2	150	45	39	24	10	15
111-605-30-2	0-600	±0.07	1.3	200	45	39	24	10	15
111-606-30	0-800	±0.06	2.6	150	60	50.8	31	10	20
111-606-30-1	0-800	±0.08	2.7	200	60	50.8	31	10	20
111-607-30	0-1000	±0.07	2.8	150	60	50.8	31	10	20
111-607-30-1	0-1000	±0.09	2.9	200	60	50.8	31	10	20
111-608-30	0-1500	±0.11	3.3	150	60	50.8	31	10	20
111-608-30-1	0-1500	±0.11	3.4	200	60	50.8	31	10	20

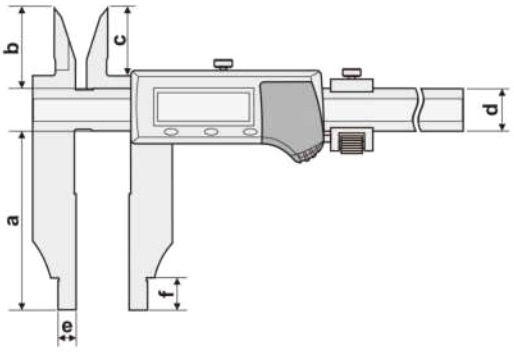

货 号 Code NO.	测量范围 Measuring Range mm	精度 Accuracy mm	重量 Weight kg	a mm	b mm	d mm	e mm	f mm
111-304-30	0-500	±0.05	1.0	100	56	24	10	15
111-304-30-1	0-500	±0.05	1.1	150	56	24	10	15
111-304-30-2	0-500	±0.07	1.2	200	56	24	10	15
111-305-30	0-600	±0.05	1.2	100	56	24	10	15
111-305-30-1	0-600	±0.05	1.2	150	56	24	10	15
111-305-30-2	0-600	±0.07	1.3	200	56	24	10	15
111-306-30	0-800	±0.06	2.6	150	67	31	10	20
111-306-30-1	0-800	±0.08	2.7	200	67	31	10	20
111-307-30	0-1000	±0.07	2.8	150	67	31	10	20
111-307-30-1	0-1000	±0.09	2.9	200	67	31	10	20
111-308-30	0-1500	±0.11	3.3	150	67	31	10	20
111-308-30-1	0-1500	±0.11	3.4	200	67	31	10	20

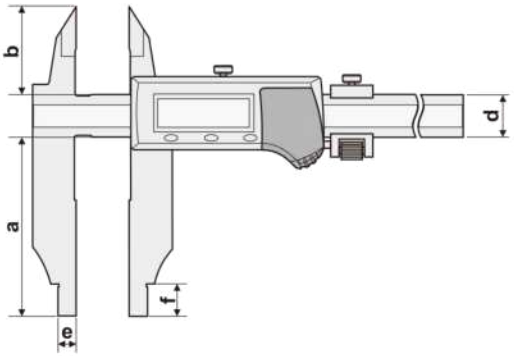

货 号 Code NO.	测量范围 Measuring Range mm	精度 Accuracy mm	重量 Weight kg	a mm	d mm	e mm	f mm
111-504-30	0-500	±0.05	1.0	100	24	10	15
111-504-30-1	0-500	±0.05	1.1	150	24	10	15
111-504-30-2	0-500	±0.07	1.2	200	24	10	15
111-505-30	0-600	±0.05	1.2	100	24	10	15
111-505-30-1	0-600	±0.05	1.2	150	24	10	15
111-505-30-2	0-600	±0.07	1.3	200	24	10	15
111-506-30	0-800	±0.06	2.6	150	31	10	20
111-506-30-1	0-800	±0.08	2.7	200	31	10	20
111-507-30	0-1000	±0.07	2.8	150	31	10	20
111-507-30-1	0-1000	±0.09	2.9	200	31	10	20
111-508-30	0-1500	±0.11	3.3	150	31	10	20
111-508-30-1	0-1500	±0.11	3.4	200	31	10	20

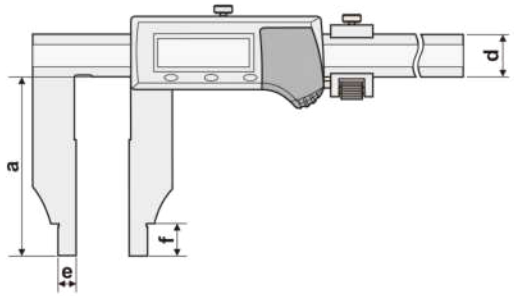

A

IP67 防水数显卡尺
Digital Caliper IP67 Class

GB/T | S/STL hardened

自动断电 Auto power-off　低电压报警 Low voltage alarm　分辨力:0.01mm Resolution:0.01mm

内置无线发射
Wireless data output

无内置发射
Without wireless data output

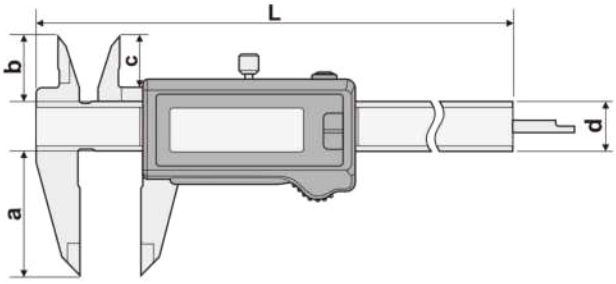

货 号 Code NO. (无线发射型)	货 号 Code NO.	测量范围 Measuring Range mm	精度 Accuracy mm	L mm	a mm	b mm	c mm	d mm
110-801-30E	110-801-30F	0-150	±0.03	236	40	21	16.5	16
110-802-30E	110-802-30F	0-200	±0.03	286	50	24	19.5	16
110-803-30E	110-803-30F	0-300	±0.04	400	60	26	21.5	16

主要特点:

- 防护等级达到IP67，可以在冷却液、水、油中使用
- 带内置无线发射器系列的无线通信距离为10米(可视距离)，如果使用WIFI中继器，通信距离可以达到120米
- 任意位置置零，便于相对测量
- 任意位置公制与英制转换
- 自动断电，拉动开机
- 大屏显示，更方便读数
- 采用两码道定位，芯片间歇工作，电流较小，电池寿命更长
- 内部稳压处理，克服了其他品牌芯片对电池电压敏感问题
- 采用了混合定位算法，没有其他品牌卡尺最大编码长度限制

FEATURES

- IP67 protection level to against coolant liquid, water, oil and dust
- Wireless data output to PC within 10 meters barrier free distance By adding WIFI signal amplifier, the distance max to 120 meters
- Zero-setting at any position, easy for measurement
- Mm/inch conversion at any position
- Automatically power off, can power on by moving the slider
- Big display screen for easy to read
- Adapt two yards for positioning, the chip works intermit, low electricity
- The internal voltage regulation overcomes the sensitivity of chips to the voltage
- Adapt a hybrid positioning algorithm, no maximum coding length constraints

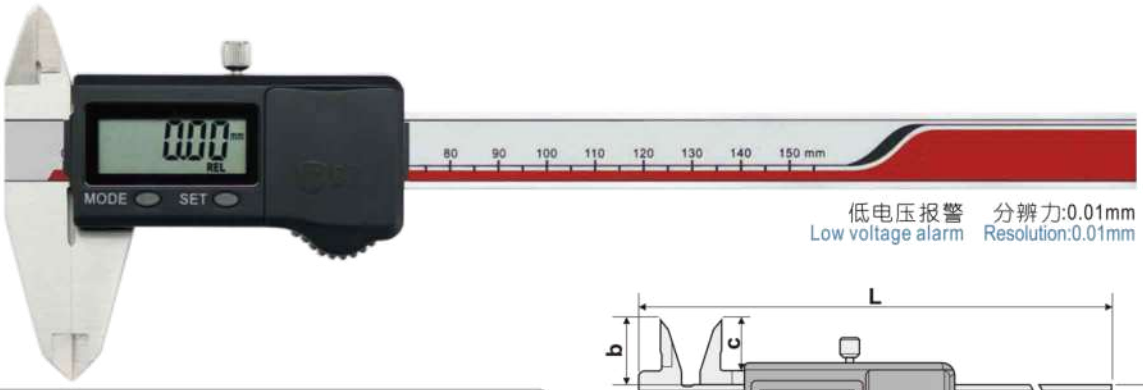

低电压报警 Low voltage alarm　分辨力:0.01mm Resolution:0.01mm

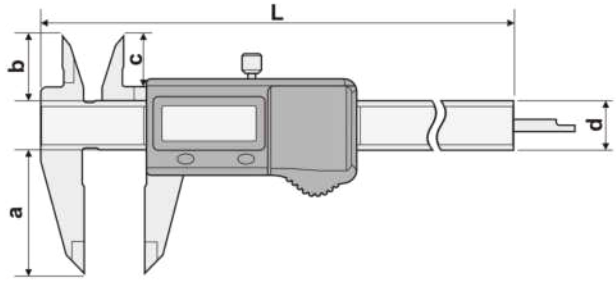

主要特点:

- 防护等级达到IP67，可在冷却液、水、油中使用
- 任意位置清零，便于相对测量与绝对测量转换
- 任意位置公制与英制转换

FEATURES

- IP67 protection level to against coolant liquid, water, oil and dust
- Zero-setting at any position, convenient for relative and absolute measure conversion
- Mm/inch conversion at any position

货 号 Code NO.	测量范围 Measuring Range mm	精度 Accuracy mm	L mm	a mm	b mm	c mm	d mm
110-801-30A	0-150	±0.03	236	40	22.5	16.8	16
110-802-30A	0-200	±0.03	286	50	25.5	19.8	16
110-803-30A	0-300	±0.04	400	60	27	21.3	17

快显数显卡尺
Fast Display Digital Caliper

GB/T | S/STL hardened

A

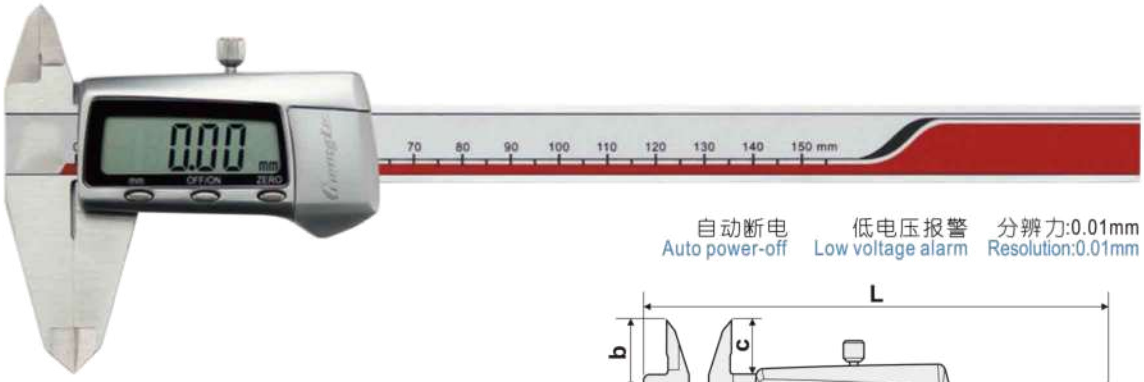

自动断电 Auto power-off　低电压报警 Low voltage alarm　分辨力:0.01mm Resolution:0.01mm

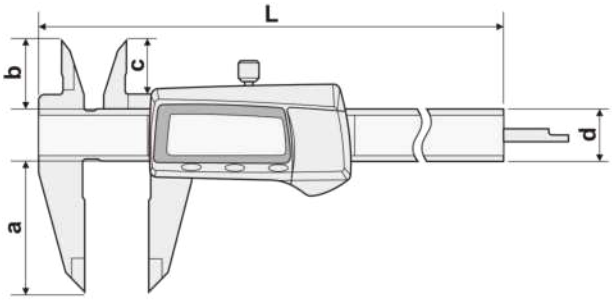

货 号 Code NO.	测量范围 Measuring Range mm	精度 Accuracy mm	L mm	a mm	b mm	c mm	d mm
110-221-10G	0-150	±0.03	236	40	21	16.5	16
110-222-10G	0-200	±0.03	286	50	24	19.5	16
110-223-10G	0-300	±0.04	400	60	26	21.5	16

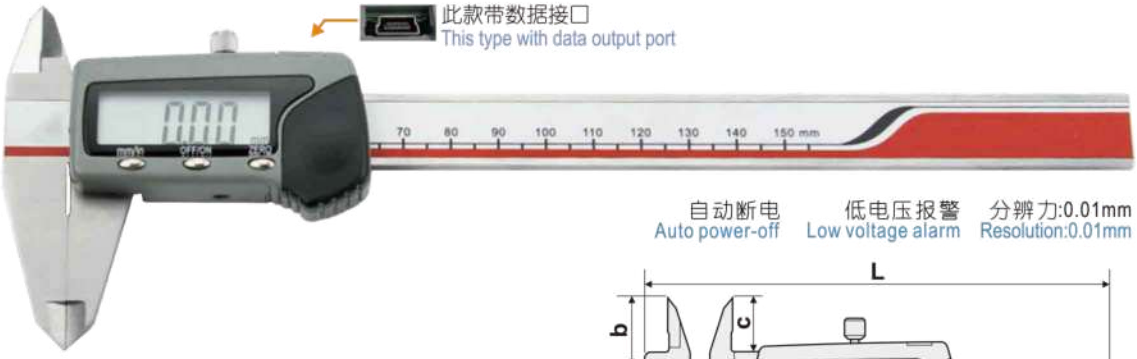

自动断电 Auto power-off　低电压报警 Low voltage alarm　分辨力:0.01mm Resolution:0.01mm

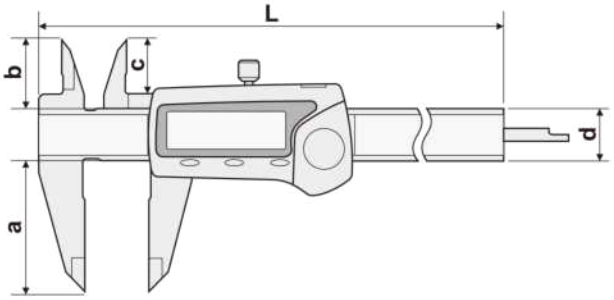

货 号 Code NO.	测量范围 Measuring Range mm	精度 Accuracy mm	L mm	a mm	b mm	c mm	d mm
110-221-10	0-150	±0.03	236	40	21	16.5	16
110-222-10	0-200	±0.03	286	50	24	19.5	16
110-223-10	0-300	±0.04	400	60	26	21.5	16

主要特点:

- 快速移动量爪时，显示数值稳定
- 任意位置清零，便于相对测量与绝对测量转换
- 任意位置公制与英制转换

FEATURES

- Display stable when moving the measuring jaws fast
- Zero-setting at any position, convenient for relative and absolute measure conversion
- Mm/inch conversion at any position

英制分数数显卡尺
Fractional Digital Caliper

GB/T | S/STL hardened

A

NEW

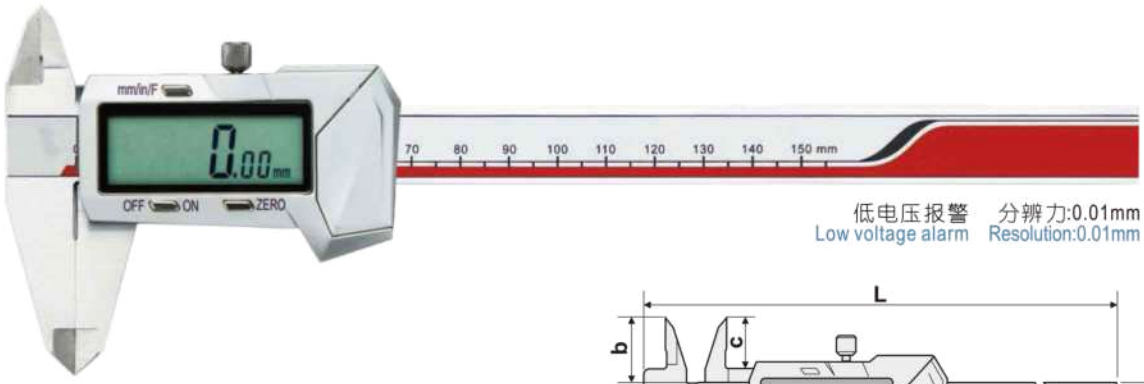

低电压报警 分辨力:0.01mm
Low voltage alarm Resolution:0.01mm

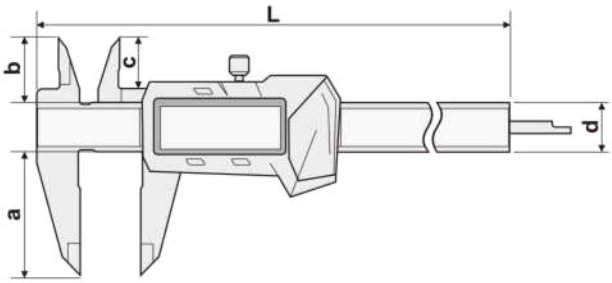

货 号 Code NO.	测量范围 Measuring Range mm	精度 Accuracy mm	L mm	a mm	b mm	c mm	d mm
111-131GD	0-150	±0.03	236	40	21	16.5	16
111-132GD	0-200	±0.03	286	50	24	19.5	16
111-133GD	0-300	±0.04	400	60	26	21.5	16

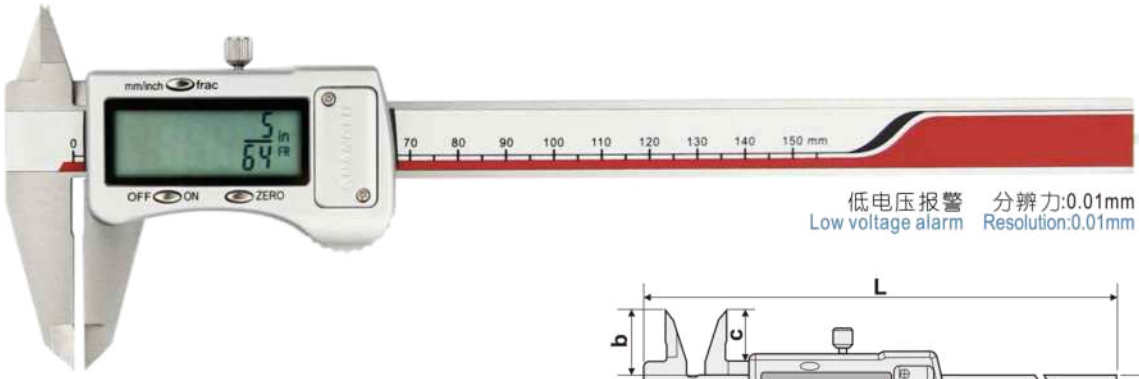

低电压报警 分辨力:0.01mm
Low voltage alarm Resolution:0.01mm

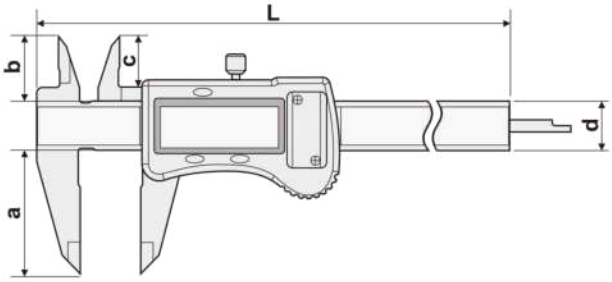

货 号 Code NO.	测量范围 Measuring Range mm	精度 Accuracy mm	L mm	a mm	b mm	c mm	d mm
111-131G	0-150	±0.03	236	40	21	16.5	16
111-132G	0-200	±0.03	286	50	24	19.5	16
111-133G	0-300	±0.04	400	60	26	21.5	16

主要特点:

- 显示屏可显示为英制分数，分辨力为1/128"或1/64"
- 任意位置清零，便于相对测量与绝对测量转换
- 任意位置公制与英制转换

FEATURES

- With metric, imperial and fractional conversion, fractional resolution optional for 1/128″ and 1/64″
- Zero-setting at any position, convenient for relative and absolute measure conversion
- Mm/inch conversion at any position

A

高精度数显卡尺
High Accuracy Digital Caliper

GB/T | S/STL hardened | SPC 数据接口

自动断电 Auto power-off　低电压报警 Low voltage alarm　分辨力:0.005mm Resolution:0.005mm

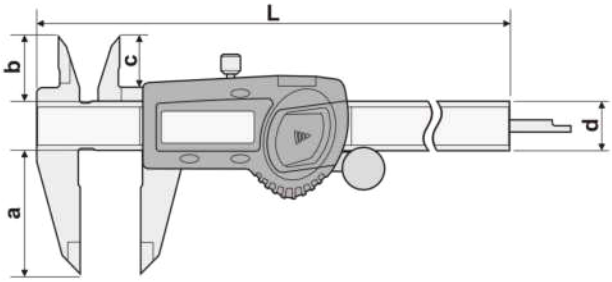

主要特点:
- 显示更高准确度读数，分辨力：0.005mm
- 任意位置清零，便于相对测量与绝对测量转换
- 任意位置公制与英制转换
- 精度更高，最大允许误差±0.02mm

FEATURES
- 0.005mm High precision resolution
- Zero-setting at any position, convenient for relative and absolute measure conversion
- Mm/inch conversion at any position
- Better accuracy, permissible error is ±0.02mm

货 号 Code NO.	测量范围 Measuring Range mm	精度 Accuracy mm	L mm	a mm	b mm	c mm	d mm
110-201	0-150	±0.02	236	40	21	16.5	16
110-202	0-200	±0.02	286	50	24	19.5	16
110-203	0-300	±0.02	400	60	26	21.5	16

镀钛数显卡尺
Titanium-plated Digital Caliper

GB/T | S/STL hardened | SPC 数据接口

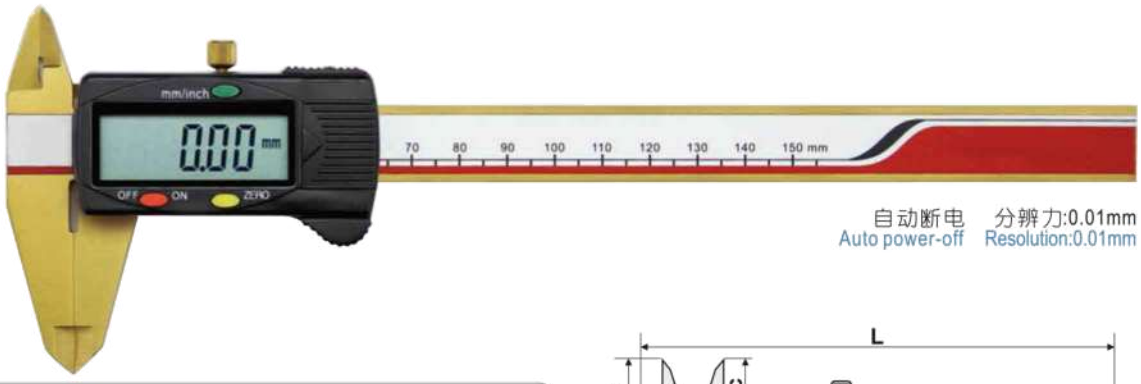

自动断电 Auto power-off　分辨力:0.01mm Resolution:0.01mm

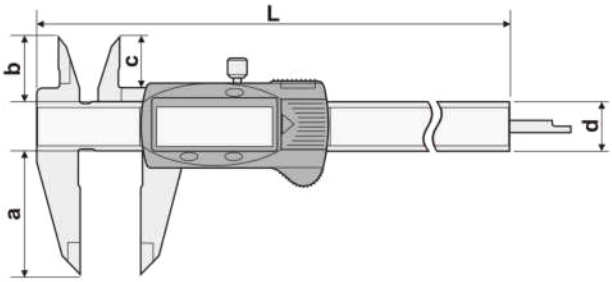

主要特点:
- 产品整体涂镀高耐磨、耐腐钛合金，使用寿命更长
- 金色钛合金涂层，美观大方
- 任意位置清零，便于相对测量与绝对测量转换
- 任意位置公制与英制转换

FEATURES
- Wear-resisting, corrosion resistance and long life
- With durable titanium-plating frame
- Zero-setting at any position, convenient for relative and absolute measure conversion
- Mm/inch conversion at any position

货 号 Code NO.	测量范围 Measuring Range mm	精度 Accuracy mm	L mm	a mm	b mm	c mm	d mm
111-101DT	0-150	±0.03	236	40	21	16.5	16
111-102DT	0-200	±0.03	286	50	24	19.5	16
111-103DT	0-300	±0.04	400	60	26	21.5	16

A

镀钛防磁数显卡尺
Antimagnetic Titanium-plated Digital Caliper

GB/T | S/STL hardened | SPC 数据接口

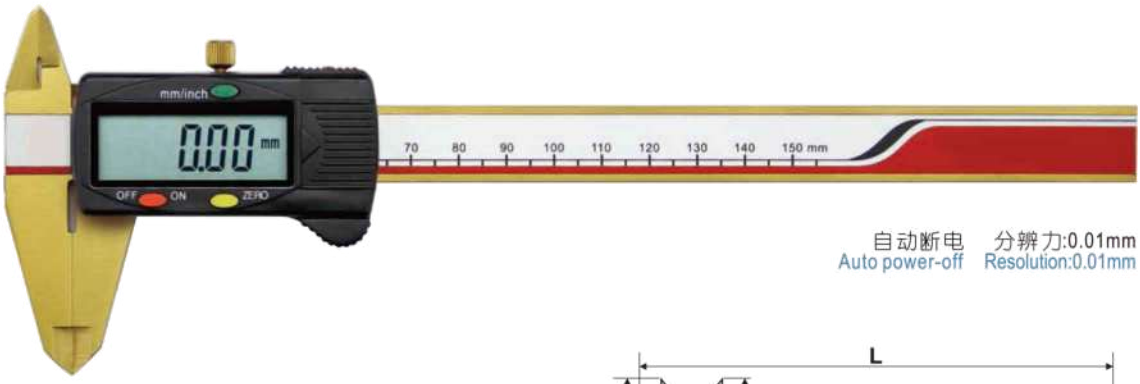

自动断电 分辨力:0.01mm
Auto power-off Resolution:0.01mm

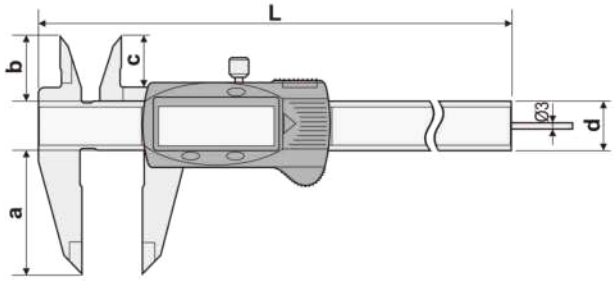

主要特点:
- 可用于测量带磁性的工件
- 金色钛合金涂层，增加了耐磨性，提高了使用寿命
- 任意位置清零，便于相对测量与绝对测量转换
- 任意位置公制与英制转换

FEATURES
- Suitable for magnetic workpiece and workshop
- With durable titanium-plating frame
- Zero-setting at any position, convenient for relative and absolute measure conversion
- Mm/inch conversion at any position

货 号 Code NO.	测量范围 Measuring Range mm	精度 Accuracy mm	L mm	a mm	b mm	c mm	d mm
110-221DF	0-150	±0.03	236	40	21	16.5	16
110-222DF	0-200	±0.03	286	50	24	19.5	16
110-223DF	0-300	±0.04	400	60	26	21.5	16

合金量面数显卡尺
Digital Caliper with Carbide-tipped Jaws

GB/T | S/STL hardened | SPC 数据接口

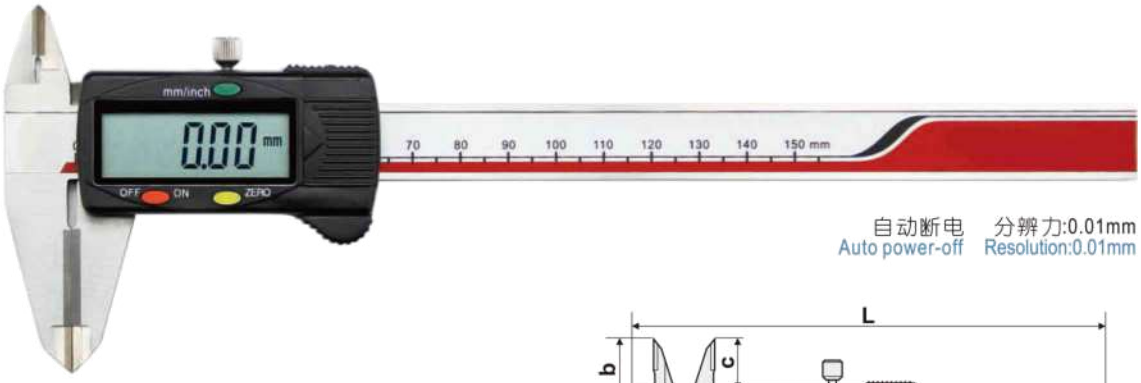

自动断电 分辨力:0.01mm
Auto power-off Resolution:0.01mm

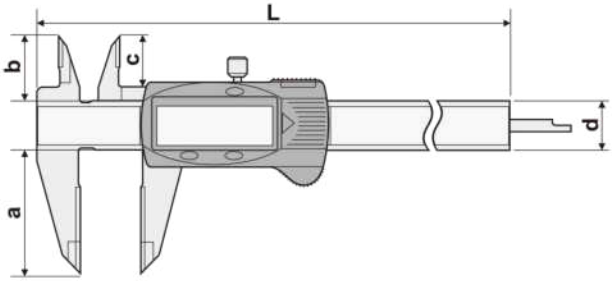

主要特点:
- 量爪镶耐磨硬质合金，使用寿命更长
- 任意位置清零，便于相对测量与绝对测量转换
- 任意位置公制与英制转换

FEATURES
- With durable carbide tips
- Zero-setting at any position, convenient for relative and absolute measure conversion
- Mm/inch conversion at any position

货 号 Code NO.	测量范围 Measuring Range mm	精度 Accuracy mm	L mm	a mm	b mm	c mm	d mm
110-251	0-150	±0.03	236	40	21	16.5	16
110-252	0-200	±0.03	286	50	24	19.5	16
110-253	0-300	±0.04	400	60	26	21.5	16

A

太阳能数显卡尺
Solar Digital Caliper

GB/T | S/STL hardened

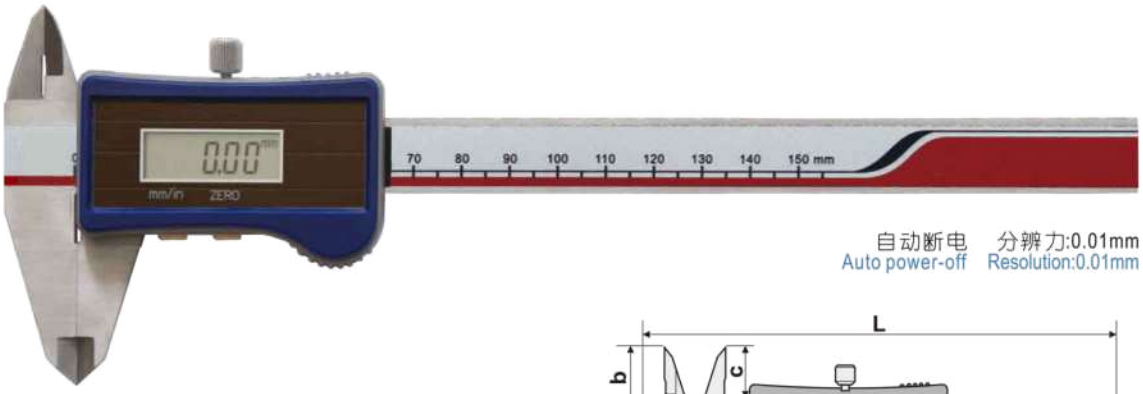

自动断电 分辨力:0.01mm
Auto power-off Resolution:0.01mm

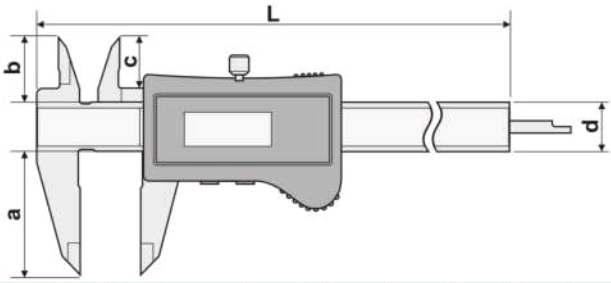

主要特点:
- 具有太阳能电池和扣式电池两种供电模式，更为环保
- 任意位置清零，便于相对测量与绝对测量转换
- 任意位置公制与英制转换

FEATURES
- Both solar and cell battery available
- Zero-setting at any position, convenient for relative and absolute measure conversion
- Mm/inch conversion at any position

货 号 Code NO.	测量范围 Measuring Range mm	精度 Accuracy mm	L mm	a mm	b mm	c mm	d mm
111-101Q	0-150	±0.03	236	40	24	19.5	16
111-102Q	0-200	±0.03	286	50	27	22.5	16
111-103Q	0-300	±0.04	400	60	29	24.5	16

左手数显卡尺
Left-handed Digital Caliper

GB/T | S/STL hardened | SPC 数据接口

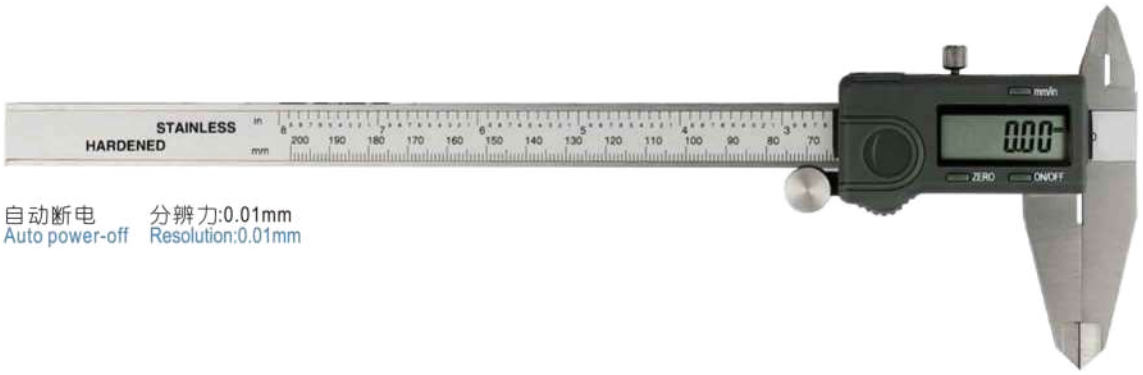

自动断电 分辨力:0.01mm
Auto power-off Resolution:0.01mm

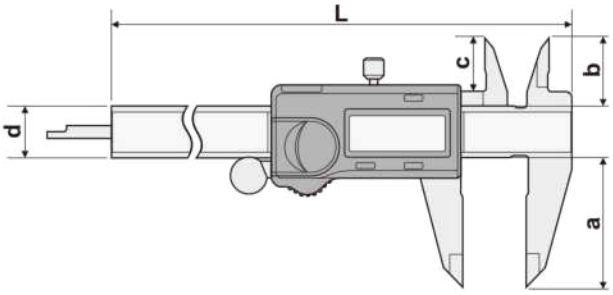

主要特点:
- 适于习惯用左手的用户或一些只能从左侧测量的场合
- 任意位置清零，便于相对测量与绝对测量转换
- 任意位置公制与英制转换

FEATURES
- Easy used for left-handed users
- Zero-setting at any position, convenient for relative and absolute measure conversion
- Mm/inch conversion at any position

货 号 Code NO.	测量范围 Measuring Range mm	精度 Accuracy mm	L mm	a mm	b mm	c mm	d mm
111-221B	0-150	±0.03	236	40	21	16.5	16
111-222B	0-200	±0.03	286	50	24	19.5	16
111-223B	0-300	±0.04	400	60	26	21.5	16

A

可更换视角数显卡尺
Digital Caliper with Flip-up Screen

GB/T | S/STL hardened

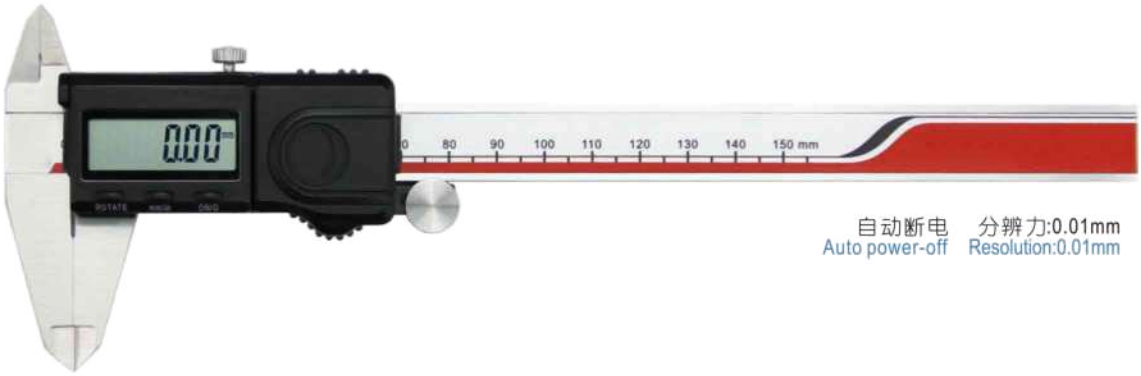

自动断电 Auto power-off　分辨力:0.01mm Resolution:0.01mm

主要特点:

- 显示屏幕可整体做0-180°翻转，显示屏幕的数字可进行显示翻转设置，在测量不方便读数时可调整显示屏的角度或显示屏数字的方向，使测量读数更方便,测量结果更准确
- 适当调整显示部件的位置和数字显示方向，能够一定程度上满足左手测量习惯的用户使用，便于左右手互换测量的转换
- 使用大容量3V锂电池，电池耐用、环保
- 任意位置清零，便于相对测量与绝对测量转换
- 任意位置公制与英制转换

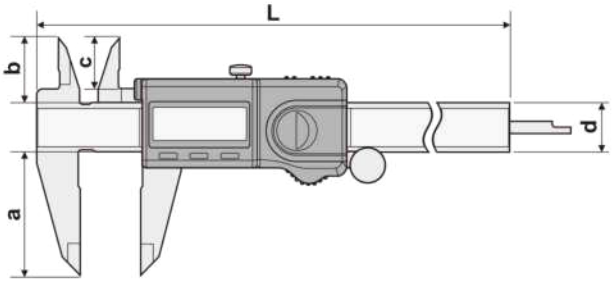

FEATURES

- 0-180°flipping display unit, digits on LCD screen can be rotated which means can read from the other direction
- Can be used as a left-handed digital caliper, easy for conversion from left and right hand
- 3V battery, durable and environmental protection
- Zero-setting at any position, convenient for relative and absolute measure conversion
- Mm/inch conversion at any position

货 号 Code NO.	测量范围 Measuring Range mm	精度 Accuracy mm	L mm	a mm	b mm	c mm	d mm
118-601	0-150	±0.03	236	40	21	16.5	16
118-602	0-200	±0.03	286	50	24	19.5	16
118-603	0-300	±0.04	400	60	26	21.5	16

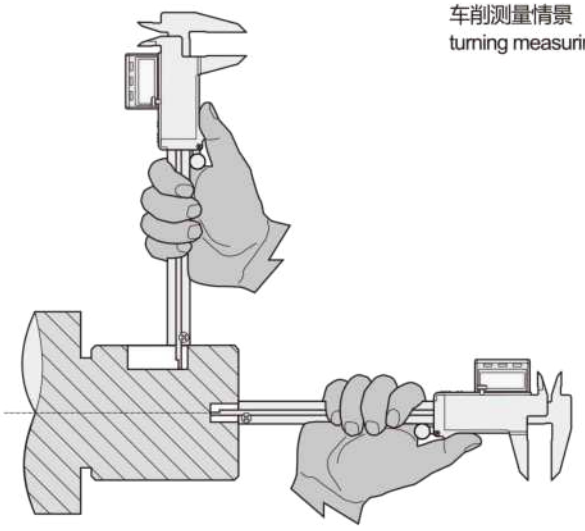

车削测量情景
turning measuring

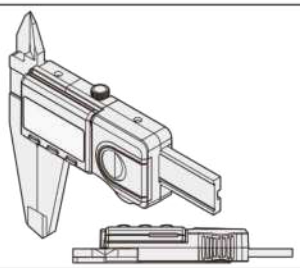

① 正常状态 Normal use

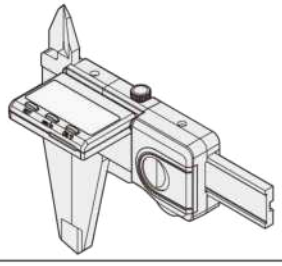

② 调整读数 视觉状态 Fliping up display

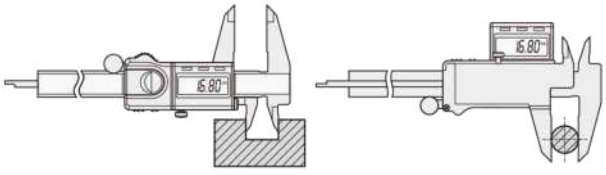

③ 左手卡尺 使用状态 Use as Left-handed caliper

绝对原点双外爪数显卡尺

Absolute Digital Caliper With Basic and Outside Measuring Jaws

GB/T | S/STL hardened | SPC 数据输出

A

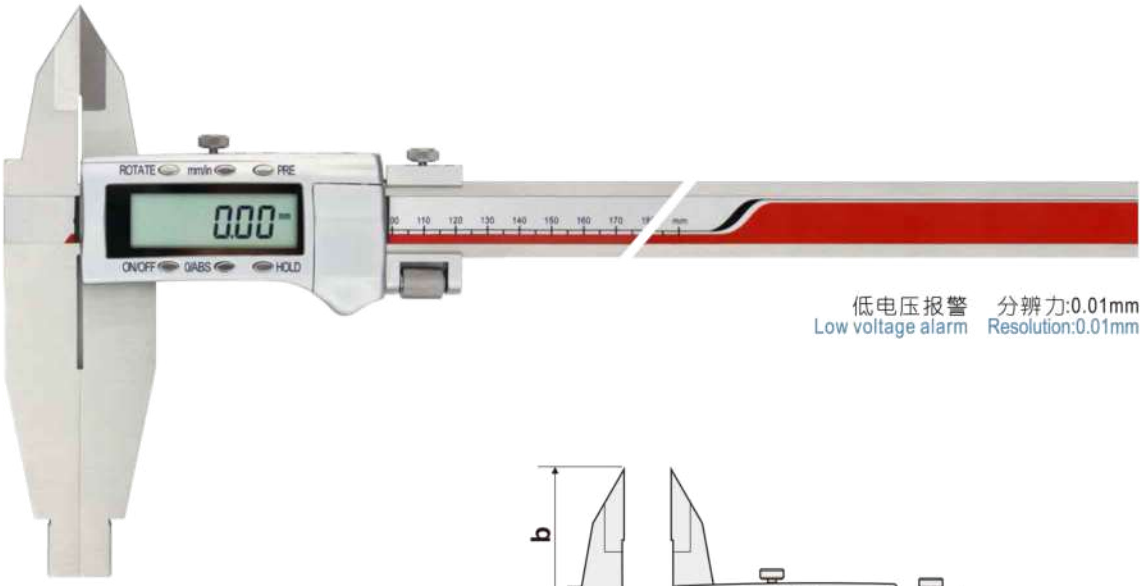

低电压报警 分辨力:0.01mm
Low voltage alarm Resolution:0.01mm

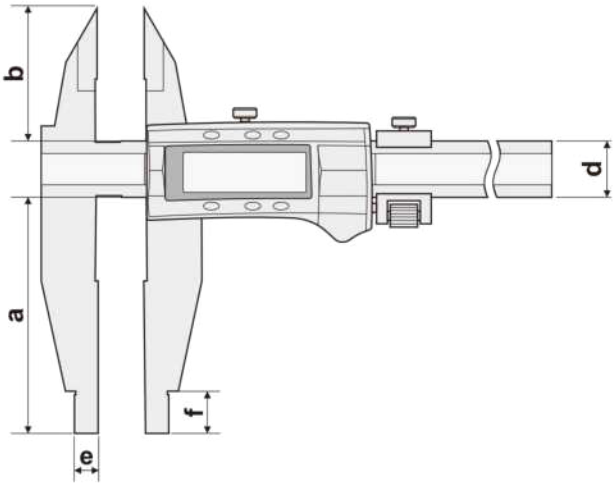

主要特点:

- 可以对所设置的原点位置进行持续跟踪，测量过程中无需反复清零
- 无论何时开机，显示屏都会显示出当前量爪相对于原点的准确位置，以便随时进行测量
- 自动开机(拉动尺框)，自动关机(连续5分钟不使用)
- 无响应速度限制，不会产生超速错误
- 显示屏的数值可进行90°旋转
- 任意位置公制与英制转换
- 带预置数功能
- 带数据保持功能

FEATURES

- Origin setting without repeated zero-setting
- Whenever power on, the display will always show the current exact measurement
- Auto power on(move caliper slider), auto power-off (5 min after using)
- No limit for moving speed
- The value can be rotated 90°
- Mm/inch conversion at any position
- Preset any reading at any position
- Data hold

货 号 Code NO.	测量范围 Measuring Range mm	精度 Accuracy mm	重量 Weight kg	a mm	b mm	d mm	e mm	f mm
111-304G-40	0-500	±0.05	1.2	100	56	24	10	18
111-304G-40-1	0-500	±0.05	1.3	150	56	24	10	18
111-305G-40	0-600	±0.05	1.3	100	56	24	10	18
111-305G-40-1	0-600	±0.05	1.4	150	56	24	10	18
111-306G-40	0-800	±0.06	2.5	150	67	31	10	24
111-306G-40-1	0-800	±0.08	2.6	200	67	31	10	24
111-307G-40	0-1000	±0.07	2.7	150	67	31	10	24
111-307G-40-1	0-1000	±0.09	2.8	200	67	31	10	24

绝对原点双刀爪数显卡尺

Absolute Digital Caliper With Standard Jaws

GB/T | S/STL hardened | SPC 数据接口

A

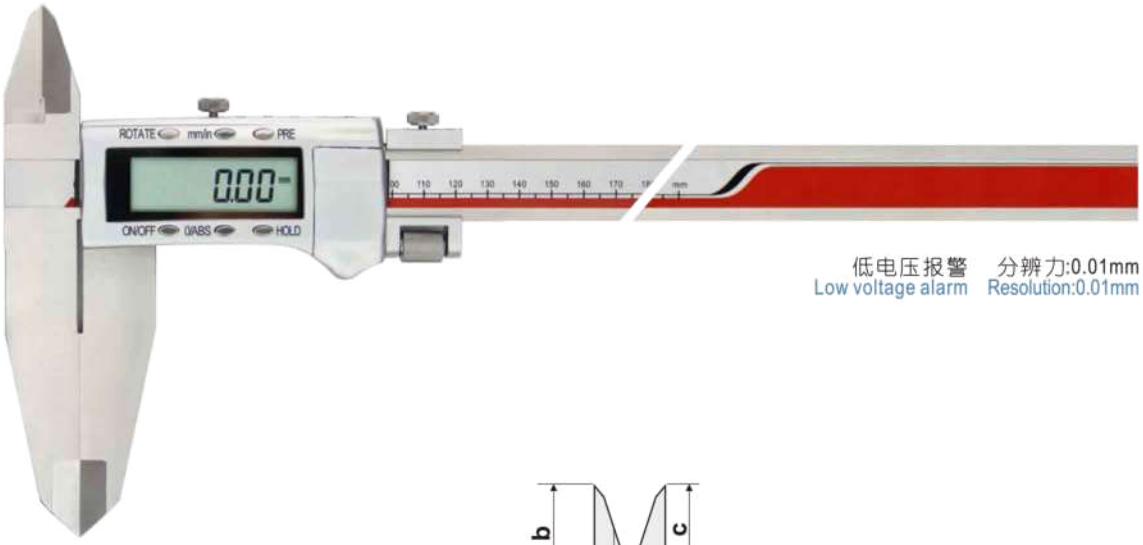

低电压报警 分辨力:0.01mm
Low voltage alarm Resolution:0.01mm

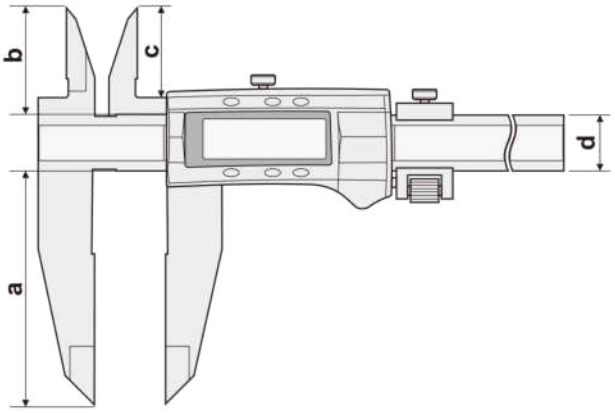

主要特点:

- 可以对所设置的原点位置进行持续跟踪，测量过程中无需反复清零
- 无论何时开机，显示屏都会显示出当前量爪相对于原点的准确位置，以便随时进行测量
- 自动开机(拉动尺框)，自动关机(连续5分钟不使用)
- 无响应速度限制，不会产生超速错误
- 显示屏的数值可进行90°旋转
- 任意位置公制与英制转换
- 带预置数功能
- 带数据保持功能

FEATURES

- Origin setting without repeated zero-setting
- Whenever power on, the display will always show the current exact measurement
- Auto power on(move caliper slider), auto power-off (5 min after using)
- No limit for moving speed
- The value can be rotated 90°
- Mm/inch conversion at any position
- Preset any reading at any position
- Data hold

货 号 Code NO.	测量范围 Measuring Range mm	精度 Accuracy mm	重量 Weight kg	a mm	b mm	c mm	d mm
111-404G-40	0-500	±0.05	1.2	100	45	39	24
111-404G-40-1	0-500	±0.05	1.3	150	45	39	24
111-405G-40	0-600	±0.05	1.3	100	45	39	24
111-405G-40-1	0-600	±0.05	1.4	150	45	39	24
111-406G-40	0-800	±0.06	2.5	150	60	51	31
111-406G-40-1	0-800	±0.08	2.6	200	60	51	31
111-407G-40	0-1000	±0.07	2.7	150	60	51	31
111-407G-40-1	0-1000	±0.09	2.8	200	60	51	31

A

绝对原点数显大卡尺
Absolute Digital Long Caliper

GB/T | S/STL hardened | SPC 既福相口

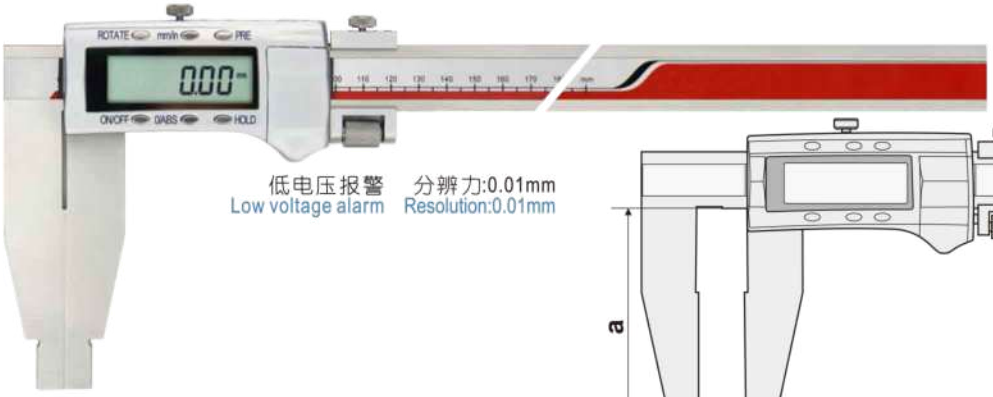

低电压报警 分辨力:0.01mm
Low voltage alarm Resolution:0.01mm

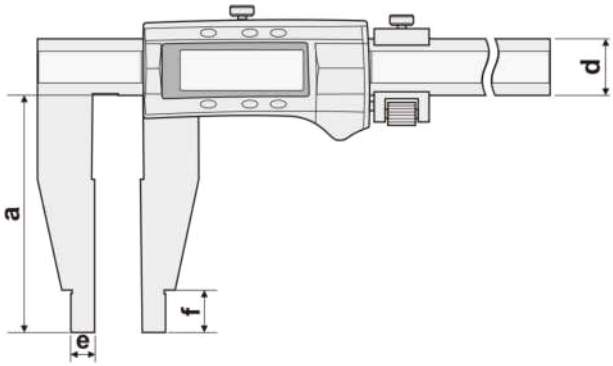

货 号 Code NO.	测量范围 Measuring Range mm	精度 Accuracy mm	重量 Weight kg	a mm	d mm	e mm	f mm
111-504G-40	0-500	±0.05	1.2	100	24	10	18
111-504G-40-1	0-500	±0.05	1.3	150	24	10	18
111-505G-40	0-600	±0.05	1.3	100	24	10	18
111-505G-40-1	0-600	±0.05	1.4	150	24	10	18
111-506G-40	0-800	±0.06	2.5	150	31	10	24
111-506G-40-1	0-800	±0.08	2.6	200	31	10	24
111-507G-40	0-1000	±0.07	2.7	150	31	10	24
111-507G-40-1	0-1000	±0.09	2.8	200	31	10	24

主要特点:

- 可以对所设置的原点位置进行持续跟踪，测量过程中无需反复清零
- 无论何时开机，显示屏都会显示出当前量爪相对于原点的准确位置，以便随时进行测量
- 自动开机(拉动尺框)，自动关机(连续5分钟不使用)
- 无响应速度限制，不会产生超速错误
- 显示屏的数值可进行90°旋转
- 任意位置公制与英制转换
- 带预置数功能
- 带数据保持功能

FEATURES

- Origin setting without repeated zero-setting
- Whenever power on, the display will always show the current exact measurement
- Auto power on(move caliper slider), auto power-off (5 min after using)
- No limit for moving speed
- The value can be rotated 90°
- Mm/inch conversion at any position
- Preset any reading at any position
- Data hold

绝对原点双内爪数显卡尺
Absolute Digital Caliper with Inside measuring Jaws

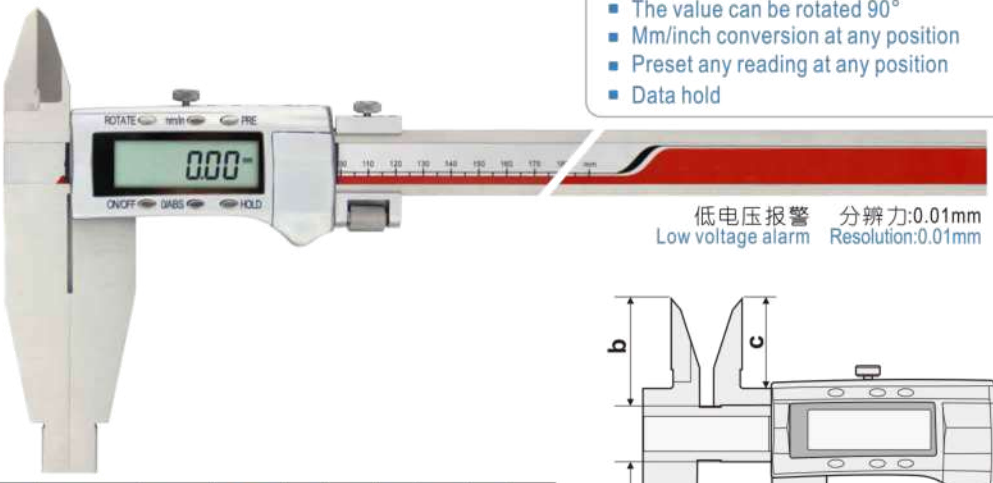

低电压报警 分辨力:0.01mm
Low voltage alarm Resolution:0.01mm

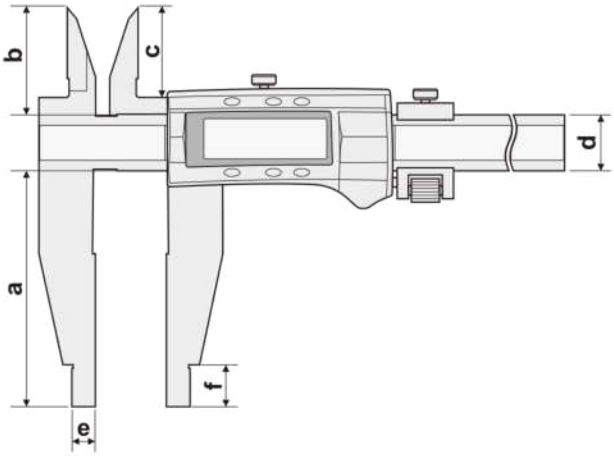

货 号 Code NO.	测量范围 Measuring Range mm	精度 Accuracy mm	重量 Weight kg	a mm	b mm	c mm	d mm	e mm	f mm
111-604G-40	0-500	±0.05	1.2	100	45	39	24	10	18
111-604G-40-1	0-500	±0.05	1.3	150	45	39	24	10	18
111-605G-40	0-600	±0.05	1.3	100	45	39	24	10	18
111-605G-40-1	0-600	±0.05	1.4	150	45	39	24	10	18
111-606G-40	0-800	±0.06	2.5	150	60	51	31	10	24
111-606G-40-1	0-800	±0.08	2.6	200	60	51	31	10	24
111-607G-40	0-1000	±0.07	2.7	150	60	51	31	10	24
111-607G-40-1	0-1000	±0.09	2.8	200	60	51	31	10	24

A

双外爪数显卡尺

Digital Caliper With Basic and Outside Measuring Jaws

GB/T | S/STL hardened | SPC 数据接口

低电压报警 分辨力:0.01mm
Low voltage alarm Resolution:0.01mm

主要特点:

- 下爪为圆弧形内测量面更适于测量精密内孔或槽的尺寸，带有外测上爪
- 任意位置清零，便于相对测量与绝对测量转换
- 带预置数功能
- 任意位置公制与英制转换
- 带有微调装置
- 带数据保持功能

FEATURES

- Nib shaped jaws for ID and OD measurement, carrying upper jaws for OD measurements
- Zero-setting at any position, convenient for relative and absolute measure conversion
- Preset any reading at any position
- Mm/inch conversion at any position
- With fine-adjustment carriage
- Data hold

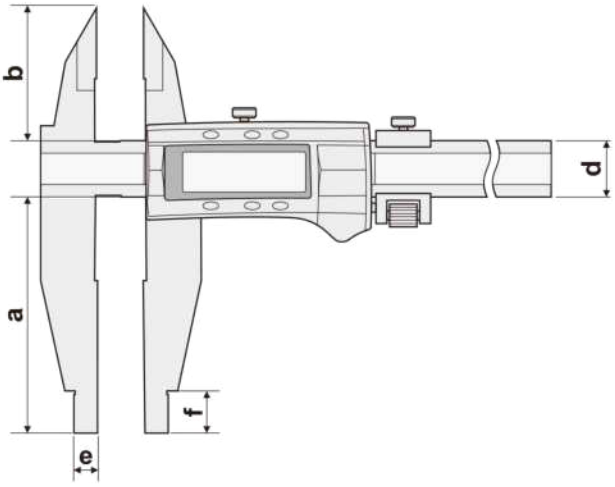

货 号 Code NO.	测量范围 Measuring Range mm	精度 Accuracy mm	重量 Weight kg	a mm	b mm	d mm	e mm	f mm
111-300	0-200	±0.03	–	60	38	17	5	12
111-300-1	0-200	±0.03	–	75	38	17	5	12
111-300GS-1J	0-200	±0.03	–	90	45	20	5	12
111-301	0-250	±0.03	–	60	38	17	5	12
111-301-1	0-250	±0.03	–	75	38	17	5	12
111-301GS-1J	0-250	±0.03	–	90	45	20	5	12
111-301GS-2	0-250	±0.03	–	100	56	24	10	18
111-301GS-3	0-250	±0.03	–	125	56	24	10	18
111-302	0-300	±0.04	–	60	38	17	5	12
111-302-1	0-300	±0.04	–	75	38	17	5	12
111-302GS-2J	0-300	±0.04	–	90	45	20	5	12
111-302GS-3	0-300	±0.04	–	100	56	24	10	18
111-302GS-4	0-300	±0.05	–	125	56	24	10	18
111-302GS-5	0-300	±0.05	–	150	56	24	10	18
111-303GS	0-400	±0.04	–	100	56	24	10	18
111-303GS-1	0-400	±0.05	–	125	56	24	10	18
111-303GS-2	0-400	±0.06	–	150	56	24	10	18
111-303GS-3	0-400	±0.06	–	200	67	31	10	24
111-304GS	0-500	±0.05	1.2	100	56	24	10	18
111-304GS-1	0-500	±0.05	1.3	150	56	24	10	18
111-304GS-2	0-500	±0.07	2.2	200	67	31	10	24

货 号 Code NO.	测量范围 Measuring Range mm	精度 Accuracy mm	重量 Weight kg	a mm	b mm	d mm	e mm	f mm
111-305GS	0-600	±0.05	1.3	100	80	24	10	18
111-305GS-1	0-600	±0.05	1.4	150	80	24	10	18
111-305GS-2	0-600	±0.07	2.3	200	67	31	10	24
111-306GS	0-800	±0.06	2.5	125	67	31	10	24
111-306GS-1	0-800	±0.06	2.5	150	67	31	10	24
111-306GS-2	0-800	±0.08	2.6	200	67	31	10	24
111-306GS-3	0-800	±0.09	4.7	250	80	42	10	24
111-307GS-0	0-1000	±0.07	2.7	125	67	31	10	24
111-307GS	0-1000	±0.07	2.7	150	67	31	10	24
111-307GS-1	0-1000	±0.09	2.8	200	67	31	10	24
111-307GS-2	0-1000	±0.10	5.2	250	80	42	10	24
111-307GS-5	0-1250	±0.08	3.1	150	67	31	10	24
111-307GS-6	0-1250	±0.11	3.2	200	67	31	10	24
111-308GS	0-1500	±0.11	6.2	150	80	42	10	24
111-308GS-1	0-1500	±0.11	6.5	200	80	42	10	24
111-308GS-2	0-1500	±0.14	7.1	250	80	42	10	24
111-308GS-3	0-1500	±0.15	7.5	300	80	42	10	24
111-309GS	0-2000	±0.14	6.6	150	80	42	10	24
111-309GS-1	0-2000	±0.14	7.2	200	80	42	10	24
111-309GS-2	0-2000	±0.18	7.6	250	80	42	10	24
111-309GS-3	0-2000	±0.20	8.0	300	80	42	10	24
111-311GS	0-3000	±0.26	9.5	150	80	42	10	24
111-311GS-1	0-3000	±0.26	9.9	200	80	42	10	24
111-311GS-2	0-3000	±0.26	10.3	250	80	42	10	24
111-311GS-3	0-3000	±0.27	10.7	300	80	42	10	24

双刀爪数显卡尺
Digital Caliper With Standard Jaws

GB/T | S/STL hardened | SPC 既福相口

A

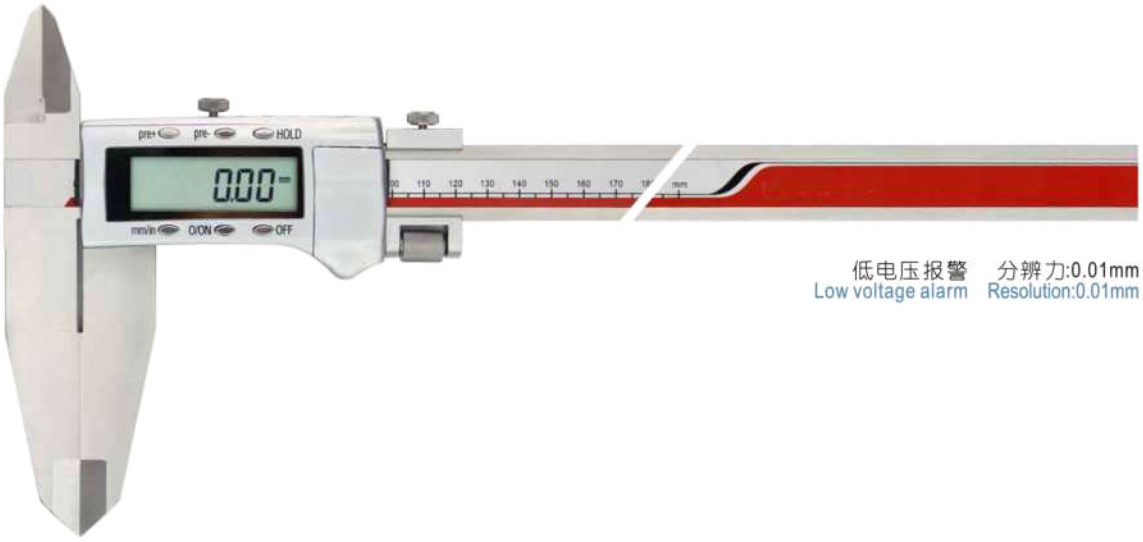

低电压报警 分辨力:0.01mm
Low voltage alarm Resolution:0.01mm

主要特点:

- 下爪为加长的刀口爪形，可用于测量凹槽尺寸，带有内测上爪
- 任意位置清零，便于相对测量与绝对测量转换
- 带预置数功能
- 任意位置公制与英制转换
- 带有微调装置
- 带数据保持功能

FEATURES

- Easy used for large OD and ID measurements
- Zero-setting at any position, convenient for relative and absolute measure conversion
- Preset any reading at any position
- Mm/inch conversion at any position
- With fine-adjustment carriage
- Data hold

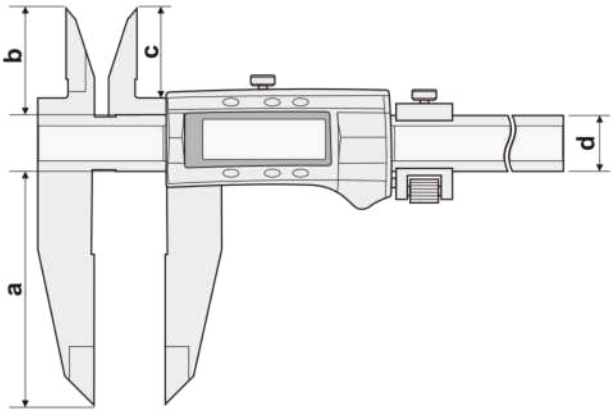

货 号 Code NO.	测量范围 Measuring Range mm	精度 Accuracy mm	重量 Weight kg	a mm	b mm	c mm	d mm
111-400	0-200	±0.03	–	50	28	23.5	17
111-400-1	0-200	±0.03	–	75	28	23.5	17
111-400GS-2J	0-200	±0.03	–	90	42	36.5	20
111-401	0-250	±0.03	–	60	28	23.5	17
111-401-1	0-250	±0.03	–	75	28	23.5	17
111-401GS-2J	0-250	±0.03	–	90	42	36.5	20
111-402	0-300	±0.04	–	60	28	23.5	17
111-402-1	0-300	±0.04	–	75	28	23.5	17
111-402GS-2J	0-300	±0.04	–	90	42	36.5	20
111-402GS-3	0-300	±0.04	–	100	45	38	24
111-402GS-4	0-300	±0.05	–	125	45	38	24
111-402GS-5	0-300	±0.05	–	150	45	38	24
111-403GS	0-400	±0.04	–	100	45	38	24
111-403GS-1	0-400	±0.05	–	125	45	38	24
111-403GS-2	0-400	±0.06	–	150	60	51.5	31
111-403GS-3	0-400	±0.06	–	200	60	51.5	31
111-404GS	0-500	±0.05	1.2	100	45	38	24
111-404GS-1	0-500	±0.05	1.3	150	60	51.5	31
111-404GS-2	0-500	±0.07	2.2	200	60	51.5	31
111-405GS	0-600	±0.05	1.3	100	45	38	24
111-405GS-1	0-600	±0.05	1.4	150	60	51.5	31

货 号 Code NO.	测量范围 Measuring Range mm	精度 Accuracy mm	重量 Weight kg	a mm	b mm	c mm	d mm
111-405GS-2	0-600	±0.07	2.3	200	60	51.5	31
111-406GS	0-800	±0.06	2.5	125	60	51.5	31
111-406GS-1	0-800	±0.06	2.5	150	60	51.5	31
111-406GS-2	0-800	±0.08	2.6	200	60	51.5	31
111-406GS-3	0-800	±0.09	4.7	250	70	61	42
111-407GS	0-1000	±0.07	2.7	125	60	51.5	31
111-407GS-1	0-1000	±0.07	2.7	150	60	51.5	31
111-407GS-2	0-1000	±0.09	2.8	200	60	51.5	31
111-407GS-3	0-1000	±0.10	5.2	250	70	61	42
111-408GS	0-1250	±0.08	3.1	150	60	51.5	31
111-408GS-1	0-1250	±0.11	3.2	200	60	51.5	31
111-408GS-2	0-1250	±0.12	5.7	250	70	61	42
111-408GS-3	0-1250	±0.15	6.0	300	70	61	42
111-409GS	0-1500	±0.11	6.2	150	70	61	42
111-409GS-1	0-1500	±0.11	6.5	200	70	61	42
111-409GS-2	0-1500	±0.14	7.1	250	70	61	42
111-409GS-3	0-1500	±0.16	7.5	300	70	61	42
111-410GS	0-2000	±0.14	6.6	150	70	61	42
111-410GS-1	0-2000	±0.14	7.2	200	70	61	42
111-410GS-2	0-2000	±0.17	7.6	250	70	61	42
111-410GS-3	0-2000	±0.18	8.0	300	70	61	42

单向爪数显卡尺
Digital Caliper With Basic Jaws

GB/T | S/STL hardened | SPC 既强超口

A

低电压报警 分辨力:0.01mm
Low voltage alarm Resolution:0.01mm

主要特点:

- 圆弧形内测量面更适于测量精密内孔或槽的尺寸
- 任意位置清零，便于相对测量与绝对测量转换
- 带预置数功能
- 任意位置公制与英制转换
- 带有微调装置
- 带数据保持功能

FEATURES

- Nib shaped jaws for ID and OD measurement
- Zero-setting at any position, convenient for relative and absolute measure conversion
- Preset any reading at any position
- Mm/inch conversion at any position
- With fine-adjustment carriage
- Data hold

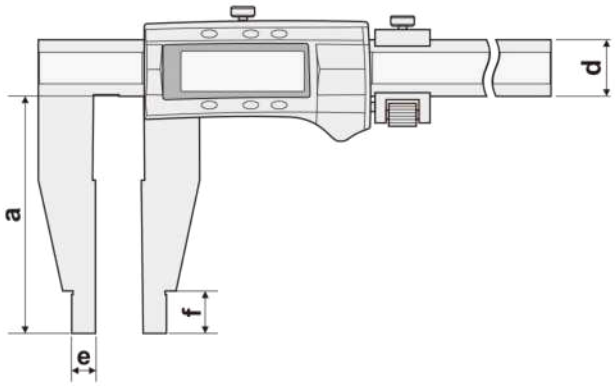

货 号 Code NO.	测量范围 Measuring Range mm	精度 Accuracy mm	重量 Weight kg	a mm	d mm	e mm	f mm
111-499	0-150	± 0.03	–	40	17	5	8
111-499-1	0-150	± 0.03	–	75	17	5	12
111-500	0-200	± 0.03	–	40	17	5	8
111-500-1	0-200	± 0.03	–	75	17	5	12
111-500GS-1J	0-200	± 0.03	–	90	20	5	12
111-501	0-250	± 0.03	–	60	17	5	12
111-501-1	0-250	± 0.03	–	75	17	5	12
111-501GS-1J	0-250	± 0.03	–	90	20	5	12
111-501GS-2	0-250	± 0.03	–	100	24	10	18
111-501GS-3	0-250	± 0.05	–	150	24	10	18
111-502	0-300	± 0.04	–	60	17	5	12
111-502-1	0-300	± 0.04	–	75	17	5	12
111-502GS-1J	0-300	± 0.04	–	90	20	5	12
111-502GS-2	0-300	± 0.04	–	100	24	10	18
111-502GS-3	0-300	± 0.05	–	150	24	10	18
111-503GS-1	0-400	± 0.04	–	100	24	10	18
111-503GS-2	0-400	± 0.06	–	150	24	10	18
111-503GS-3	0-400	± 0.06	–	200	31	10	24
111-504GS	0-500	± 0.05	1.2	100	24	10	18
111-504GS-1	0-500	± 0.05	1.3	150	24	10	18
111-504GS-2	0-500	± 0.07	2.2	200	31	10	24
111-505GS	0-600	± 0.05	1.3	100	24	10	18
111-505GS-1	0-600	± 0.05	1.4	150	24	10	18
111-505GS-2	0-600	± 0.07	2.3	200	31	10	24
111-506GS	0-800	± 0.06	2.5	100	31	10	24
111-506GS-0	0-800	± 0.06	2.5	125	31	10	24
111-506GS-1	0-800	± 0.06	2.5	150	31	10	24

货 号 Code NO.	测量范围 Measuring Range mm	精度 Accuracy mm	重量 Weight kg	a mm	d mm	e mm	f mm
111-506GS-2	0-800	± 0.08	2.6	200	31	10	24
111-506GS-3	0-800	± 0.09	4.7	250	42	10	24
111-507GS	0-1000	± 0.07	2.7	125	31	10	24
111-507GS-1	0-1000	± 0.07	2.7	150	31	10	24
111-507GS-2	0-1000	± 0.09	2.8	200	31	10	24
111-507-3	0-1000	± 0.10	5.2	250	42	10	24
111-507GS-7	0-1250	± 0.08	3.1	125	31	10	24
111-507GS-8	0-1250	± 0.08	3.1	150	31	10	24
111-507GS-9	0-1250	± 0.11	3.2	200	31	10	24
111-507GS-11	0-1250	± 0.12	5.7	250	42	10	24
111-507GS-12	0-1250	± 0.15	6.0	300	42	10	24
111-508GS	0-1500	± 0.11	5.8	125	42	10	24
111-508GS-1	0-1500	± 0.11	6.2	150	42	10	24
111-508GS-2	0-1500	± 0.11	6.5	200	42	10	24
111-508GS-3	0-1500	± 0.14	7.1	250	42	10	24
111-508GS-4	0-1500	± 0.16	7.5	300	42	10	24
111-509GS	0-2000	± 0.14	6.3	125	42	10	24
111-509GS-1	0-2000	± 0.14	6.6	150	42	10	24
111-509GS-2	0-2000	± 0.14	7.2	200	42	10	24
111-509GS-3	0-2000	± 0.17	7.6	250	42	10	24
111-509GS-4	0-2000	± 0.18	8.0	300	42	10	24
111-511GS	0-3000	± 0.26	9.5	150	42	10	24
111-511GS-1	0-3000	± 0.26	9.9	200	42	10	24
111-511GS-2	0-3000	± 0.26	10.3	250	42	10	24
111-511GS-3	0-3000	± 0.27	10.7	300	42	10	24
111-513	0-4000	± 0.34	17.3	200	50	10	24
111-513-1	0-4000	± 0.34	17.7	250	50	10	24
111-513-2	0-4000	± 0.34	18.1	300	50	10	24

双内爪数显卡尺

Digital Caliper With Basic and Inside Measuring Jaws

GB/T | S/STL hardened | SPC 既福相口

A

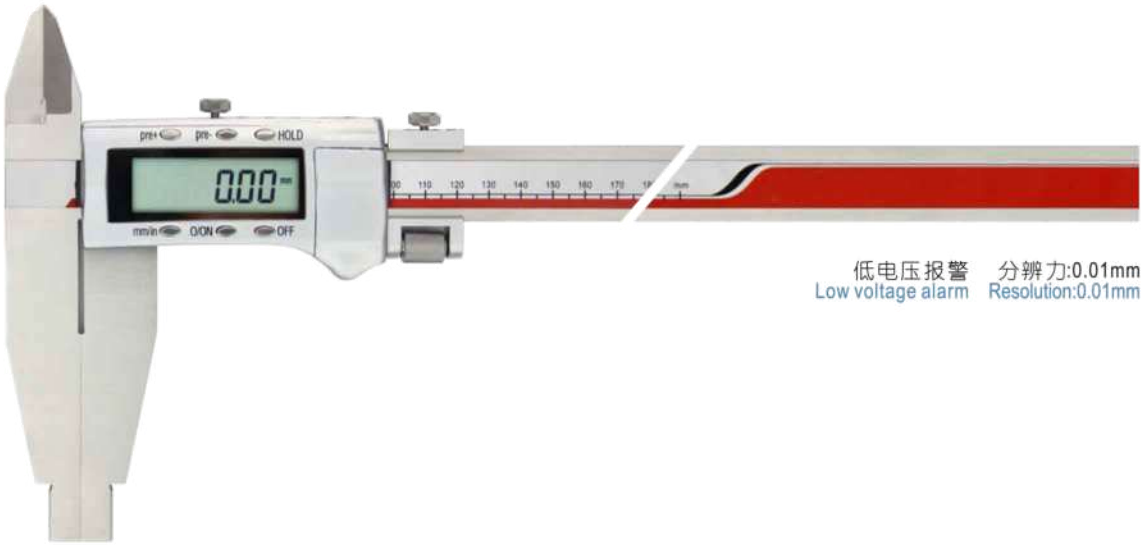

低电压报警 分辨力:0.01mm
Low voltage alarm Resolution:0.01mm

主要特点:

- 下爪为圆弧形内测量面更适于测量精密内孔或槽的尺寸，带有内测上爪
- 任意位置清零，便于相对测量与绝对测量转换
- 带预置数功能
- 任意位置公制与英制转换
- 带有微调装置
- 带数据保持功能

FEATURES

- Nib shaped jaws for ID and OD measurement, carrying upper jaws for ID measurements
- Zero-setting at any position, convenient for relative and absolute measure conversion
- Preset any reading at any position
- Mm/inch conversion at any position
- With fine-adjustment carriage
- Data hold

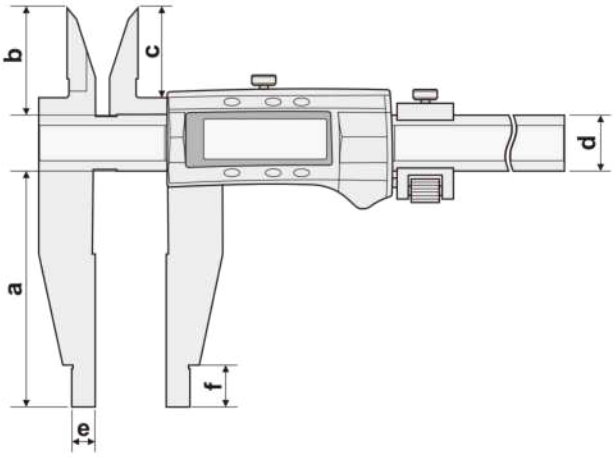

货 号 Code NO.	测量范围 Measuring Range mm	精度 Accuracy mm	重量 Weight kg	a mm	b mm	c mm	d mm	e mm	f mm
111-600-0	0-200	±0.03	–	60	28	23.5	17	5	12
111-600-1	0-200	±0.03	–	75	28	23.5	17	5	12
111-601	0-250	±0.03	–	60	28	23.5	17	5	12
111-601-1	0-250	±0.03	–	75	28	23.5	17	5	12
111-601GS-2J	0-250	±0.03	–	100	42	36.5	20	5	12
111-602	0-300	±0.04	–	60	28	23.5	17	5	12
111-602-1	0-300	±0.04	–	75	28	23.5	17	5	12
111-602GS-2J	0-300	±0.04	–	90	42	36.5	20	5	12
111-602GS-3J	0-300	±0.04	–	100	42	36.5	20	5	12
111-602GS-4	0-300	±0.05	–	125	45	38	24	10	18
111-602GS-5	0-300	±0.05	–	150	45	38	24	10	18
111-603GS-1	0-400	±0.05	–	125	45	38	24	10	18
111-603GS-2	0-400	±0.05	–	150	45	38	24	10	18
111-603GS-3	0-400	±0.06	–	200	60	51.5	31	10	24
111-604GS	0-500	±0.05	1.2	100	45	38	24	10	18
111-604GS-1	0-500	±0.05	1.3	150	60	51.5	31	10	24
111-604GS-2	0-500	±0.07	2.2	200	60	51.5	31	10	24
111-605GS	0-600	±0.05	1.3	100	45	38	24	10	18
111-605GS-1	0-600	±0.05	1.4	150	60	51.5	31	10	24
111-605GS-2	0-600	±0.07	2.3	200	60	51.5	31	10	24

货 号 Code NO.	测量范围 Measuring Range mm	精度 Accuracy mm	重量 Weight kg	a mm	b mm	c mm	d mm	e mm	f mm
111-606GS	0-800	±0.06	2.5	125	60	51.5	31	10	24
111-606GS-1	0-800	±0.06	2.5	150	60	51.5	31	10	24
111-606GS-2	0-800	±0.08	2.6	200	60	51.5	31	10	24
111-606GS-3	0-800	±0.09	4.7	250	70	61	42	10	24
111-607GS-0	0-1000	±0.07	2.7	125	60	51.5	31	10	24
111-607GS	0-1000	±0.07	2.7	150	60	51.5	31	10	24
111-607GS-1	0-1000	±0.09	2.8	200	60	51.5	31	10	24
111-607GS-2	0-1000	±0.10	5.2	250	60	61	42	10	24
111-607GS-5	0-1250	±0.08	3.1	150	60	51.5	31	10	24
111-607GS-6	0-1250	±0.11	3.2	200	60	51.5	31	10	24
111-607GS-7	0-1250	±0.12	5.7	250	70	61	42	10	24
111-608GS	0-1500	±0.11	6.2	150	70	61	42	10	24
111-608GS-1	0-1500	±0.11	6.5	200	70	61	42	10	24
111-608GS-2	0-1500	±0.14	7.1	250	70	61	42	10	24
111-608GS-3	0-1500	±0.15	7.5	300	70	61	42	10	24
111-609GS	0-2000	±0.14	6.6	150	70	61	42	10	24
111-609GS-1	0-2000	±0.14	7.2	200	70	61	42	10	24
111-609GS-2	0-2000	±0.17	7.6	250	70	61	42	10	24
111-609GS-3	0-2000	±0.18	8.0	300	70	61	42	10	24

HAFFMAN
High Precision Tools

让测量更简单

B

游标卡尺类
VERNIER CALIPERS

诚信为本·科技立业
SINCERITY & TECHNOLOGY

游标卡尺
Vernier Caliper

GB/T | S/STL hardened

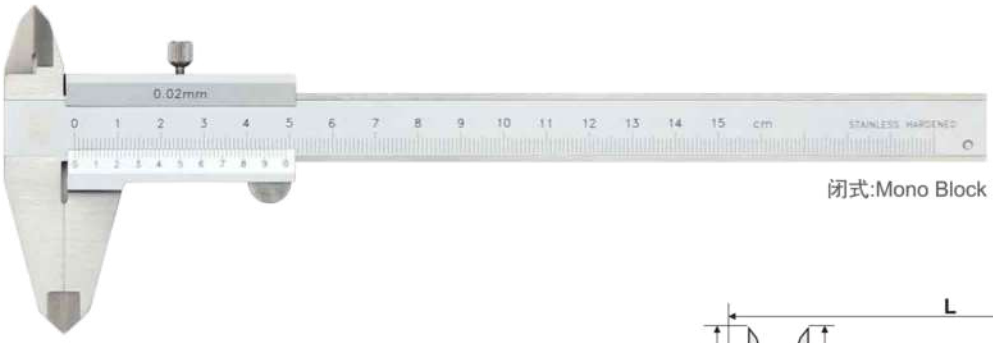

闭式:Mono Block

开式
Open Block

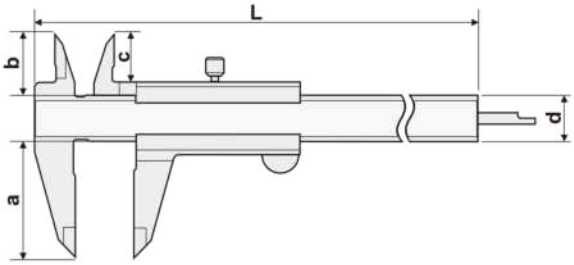

主要特点:
- 用于测量外径、内径、孔深和台阶尺寸

FEATURES
- Used for OD, ID, depth and step measurements

货 号 Code NO. 开式Open Block	货 号 Code NO. 闭式Mono Block	测量范围 Measuring Range mm	分度值 Graduation mm	精度 Accuracy mm	L mm	a mm	b mm	c mm	d mm
—	141-101E	0-100	0.05/1/128"	±0.05	170	30	17	13	13
141-122E	141-102E	0-150	0.02/. 001"	±0.03	228	40	21	16.5	16
141-123E	141-103E	0-150	0.05/1/128"	±0.05	228	40	21	16.5	16
141-124E	141-104E	0-200	0.02/. 001"	±0.03	286	50	24	19.5	16
141-125E	141-105E	0-200	0.05/1/128"	±0.05	286	50	24	19.5	16
141-126E	141-106E	0-300	0.02/. 001"	±0.04	400	60	26	21.5	16
141-127E	141-107E	0-300	0.05/1/128"	±0.05	400	60	26	21.5	16

注: 在货号中去掉E则为单公制型

左手游标卡尺
Left-handed Vernier Caliper

GB/T | S/STL hardened

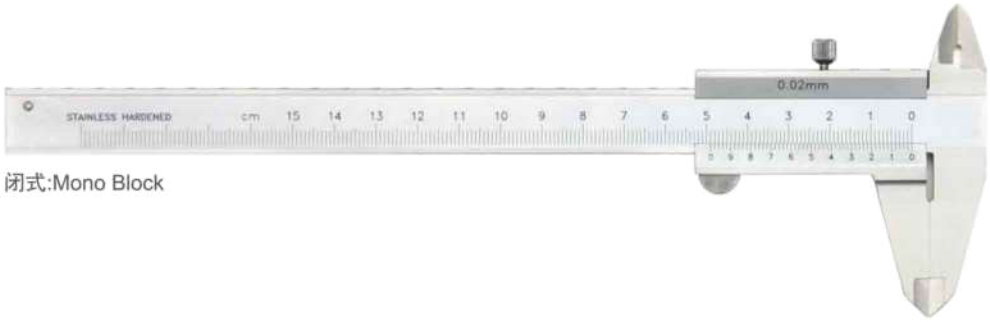

闭式:Mono Block

开式
Open Block

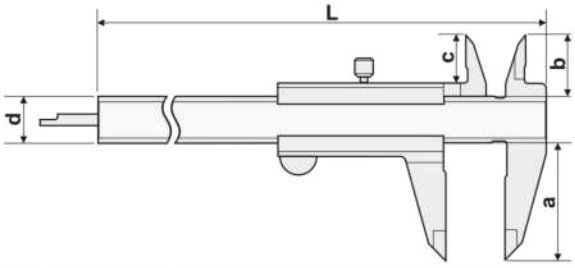

主要特点:
- 适于习惯用左手的用户或一些只能从左侧测量的场合

FEATURES
- Easy used for left-handed users or the dimensions can be measured from left

货 号 Code NO. 开式Open Block	货 号 Code NO. 闭式Mono Block	测量范围 Measuring Range mm	分度值 Graduation mm	精度 Accuracy mm	L mm	a mm	b mm	c mm	d mm
141-102ZKE	141-102ZE	0-150	0.02/. 001"	±0.03	228	40	21	16.5	16
141-103ZKE	141-103ZE	0-150	0.05/1/128"	±0.05	228	40	21	16.5	16

注: 在货号中去掉E则为单公制型

B

斜面微视差游标卡尺
Vernier Caliper Bevel Parallax-free Type

GB/T | S/STL hardened

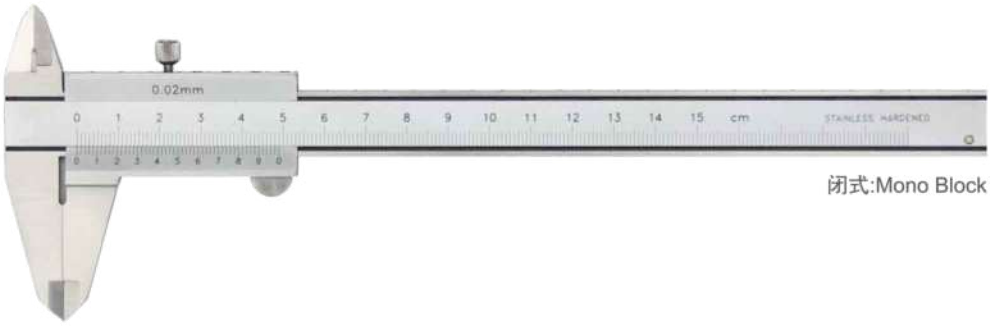

闭式:Mono Block

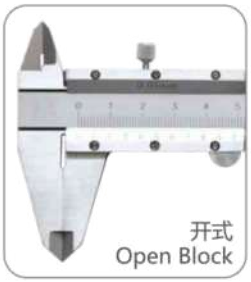

开式
Open Block

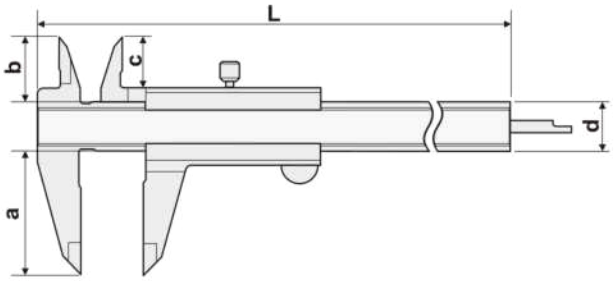

主要特点:
- 微视差的游标刻线，便于快速准确读数
- 用于测量外径、内径、孔深和台阶尺寸

FEATURES
- Parallax-free vernier scales easy for measurements
- Used for OD, ID, depth and step measurements

货 号 Code NO. 开式Open Block	货 号 Code NO. 闭式Mono Block	测量范围 Measuring Range mm	分度值 Graduation mm	精度 Accuracy mm	L mm	a mm	b mm	c mm	d mm
141-402E	141-382E	0-150	0.02/. 001"	±0.03	236	40	21	16.5	16
141-403E	141-383E	0-150	0.05/1/128"	±0.05	236	40	21	16.5	16
141-404E	141-384E	0-200	0.02/. 001"	±0.03	286	50	24	19.5	16
141-405E	141-385E	0-200	0.05/1/128"	±0.05	286	50	24	19.5	16
141-408E	141-388E	0-300	0.02/. 001"	±0.04	400	60	26	21.5	16
141-409E	141-389E	0-300	0.05/1/128"	±0.05	400	60	26	21.5	16

注: 在货号中去掉E则为单公制型

平面微视差游标卡尺
Vernier Caliper Plane Parallax-free Type

GB/T | S/STL hardened

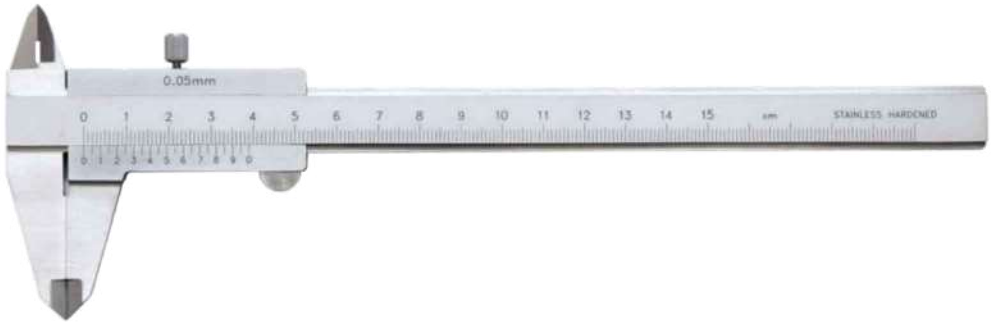

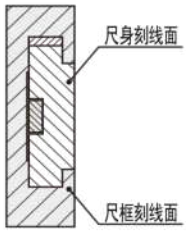

主要特点:
- 微视差的游标刻线，便于快速准确读数
- 用于测量外径、内径、孔深和台阶尺寸
- 尺框为闭式结构

FEATURES
- Parallax-free vernier scales easy for measurements
- Used for OD, ID, depth and step measurements
- Mono block

货 号 Code NO.	测量范围 Measuring Range mm	分度值 Graduation mm	精度 Accuracy mm	L mm	a mm	b mm	c mm	d mm
141-362E	0-150	0.02/. 001"	±0.03	228	40	21	16.5	16
141-363E	0-150	0.05/1/128"	±0.05	228	40	21	16.5	16
141-364E	0-200	0.02/. 001"	±0.03	286	50	24	19.5	16
141-365E	0-200	0.05/1/128"	±0.05	286	50	24	19.5	16
141-368E	0-300	0.02/. 001"	±0.04	400	60	26	21.5	16
141-369E	0-300	0.05/1/128"	±0.06	400	60	26	21.5	16

注: 在货号中去掉E则为单公制型

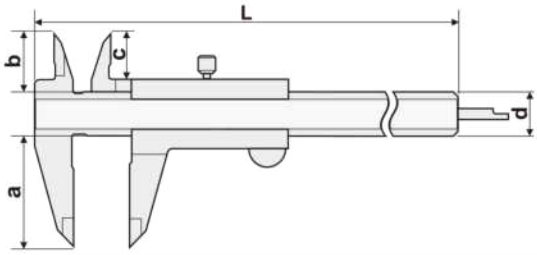

B

自锁游标卡尺
Vernier Caliper with Thumb Clamp

GB/T | S/STL hardened

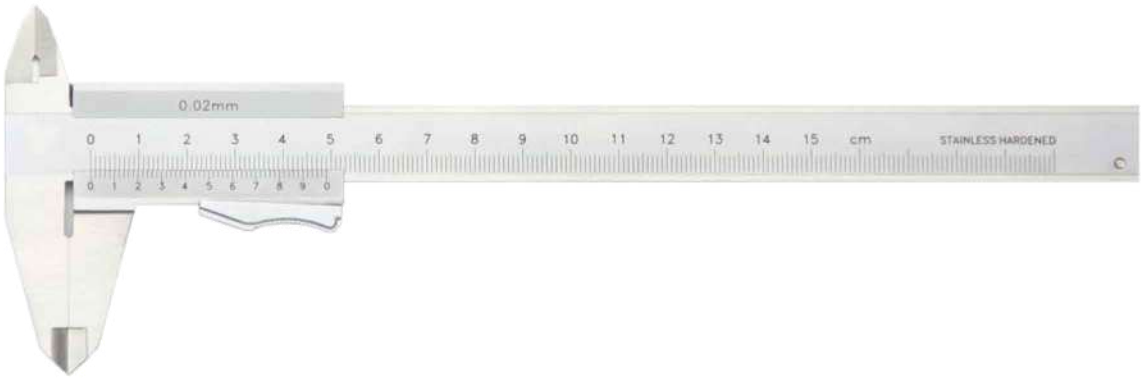

货 号 Code NO.	测量范围 Measuring Range mm	分度值 Graduation mm	精度 Accuracy mm	L mm	a mm	b mm	c mm	d mm
141-262	0-150	0.02	±0.03	236	40	21	16.5	16
141-263	0-150	0.05	±0.05	236	40	21	16.5	16
141-264	0-200	0.02	±0.03	286	50	24	19.5	16
141-265	0-200	0.05	±0.05	286	50	24	19.5	16
141-268	0-300	0.02	±0.04	400	60	26	21.5	16
141-269	0-300	0.05	±0.06	400	60	26	21.5	16

货 号 Code NO.	测量范围 Measuring Range mm	分度值 Graduation mm	精度 Accuracy mm	L mm	a mm	b mm	c mm	d mm
141-272	0-150	0.02/. 001"	±0.03	236	40	21	16.5	16
141-273	0-150	0.05/1/128"	±0.05	236	40	21	16.5	16
141-274	0-200	0.02/. 001"	±0.03	286	50	24	19.5	16
141-275	0-200	0.05/1/128"	±0.05	286	50	24	19.5	16
141-268E	0-300	0.02/. 001"	±0.04	400	60	26	21.5	16
141-269E	0-300	0.05/1/128"	±0.06	400	60	26	21.5	16

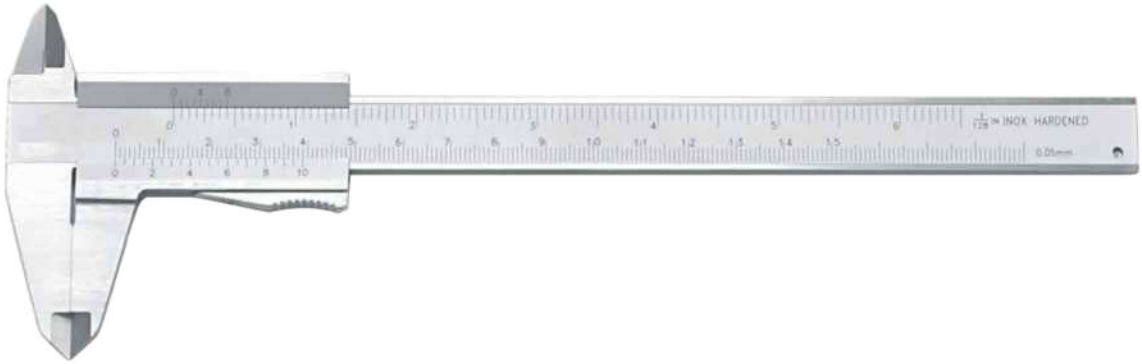

货 号 Code NO.	测量范围 Measuring Range mm	分度值 Graduation mm	精度 Accuracy mm	L mm	a mm	b mm	c mm	d mm
141-262LIM	0-150	0.02	±0.03	236	40	21	16.5	16
141-263LIM	0-150	0.05	±0.05	236	40	21	16.5	16
141-264LIM	0-200	0.02	±0.03	286	50	24	19.5	16
141-265LIM	0-200	0.05	±0.05	286	50	24	19.5	16
141-266LIM	0-300	0.02	±0.04	400	60	26	21.5	16
141-267LIM	0-300	0.05	±0.06	400	60	26	21.5	16

货 号 Code NO.	测量范围 Measuring Range mm	分度值 Graduation mm	精度 Accuracy mm	L mm	a mm	b mm	c mm	d mm
141-272LIM	0-150	0.02/. 001"	±0.03	236	40	21	16.5	16
141-273LIM	0-150	0.05/1/128"	±0.05	236	40	21	16.5	16
141-274LIM	0-200	0.02/. 001"	±0.03	286	50	24	19.5	16
141-275LIM	0-200	0.05/1/128"	±0.05	286	50	24	19.5	16
141-276LIM	0-300	0.02/. 001"	±0.04	400	60	26	21.5	16
141-277LIM	0-300	0.05/1/128"	±0.06	400	60	26	21.5	16

主要特点:
- 推手具有自动锁紧尺框的功能
- 用于测量外径、内径、孔深和台阶尺寸
- 尺框为闭式结构

FEATURES
- Auto self locking thumb clamp
- Used for OD, ID, depth and step measurements
- Mono block

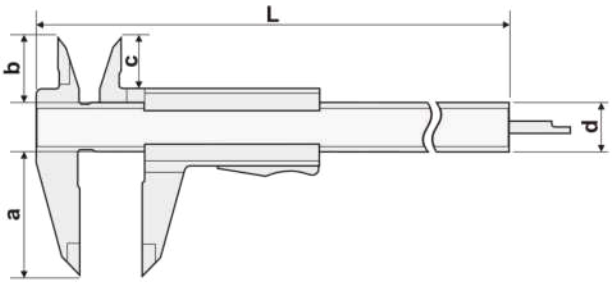

B

合金量面游标卡尺
Vernier Caliper with Carbide-tipped Jaws

GB/T | S/STL hardened

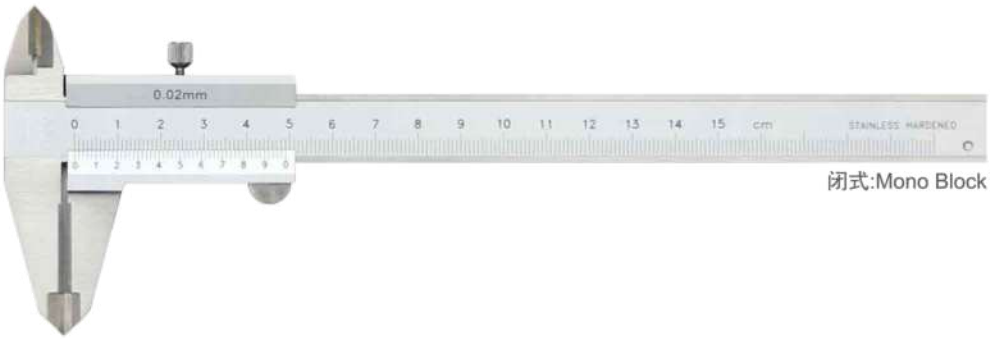

闭式:Mono Block

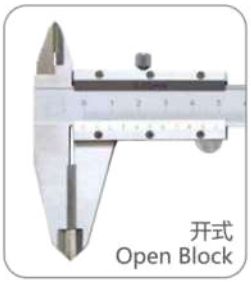
开式
Open Block

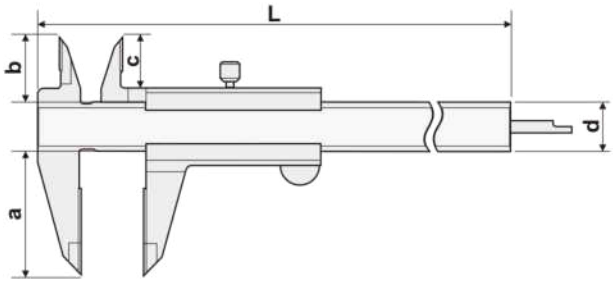

主要特点:
- 量爪镶嵌耐磨硬质合金，使用寿命更长
- 用于测量外径、内径、孔深和台阶尺寸

FEATURES
- With durable carbide tips
- Used for OD, ID, depth and step measurements

货 号 Code NO. 开式Open Block	货 号 Code NO. 闭式Mono Block	测量范围 Measuring Range mm	分度值 Graduation mm	精度 Accuracy mm	L mm	a mm	b mm	c mm	d mm
141-162E	141-152E	0-150	0.02/. 001"	±0.03	236	40	21	16.5	16
141-163E	141-153E	0-150	0.05/1/128"	±0.05	236	40	21	16.5	16
141-164E	141-154E	0-200	0.02/. 001"	±0.03	286	50	24	19.5	16
141-165E	141-155E	0-200	0.05/1/128"	±0.05	286	50	24	19.5	16
141-166E	141-156E	0-300	0.02/. 001"	±0.04	400	60	26	21.5	16
141-167E	141-157E	0-300	0.05/1/128"	±0.05	400	60	26	21.5	16

注: 在货号中去掉E则为单公制型

防磁游标卡尺
Anti-magnetic Vernier Caliper

GB/T

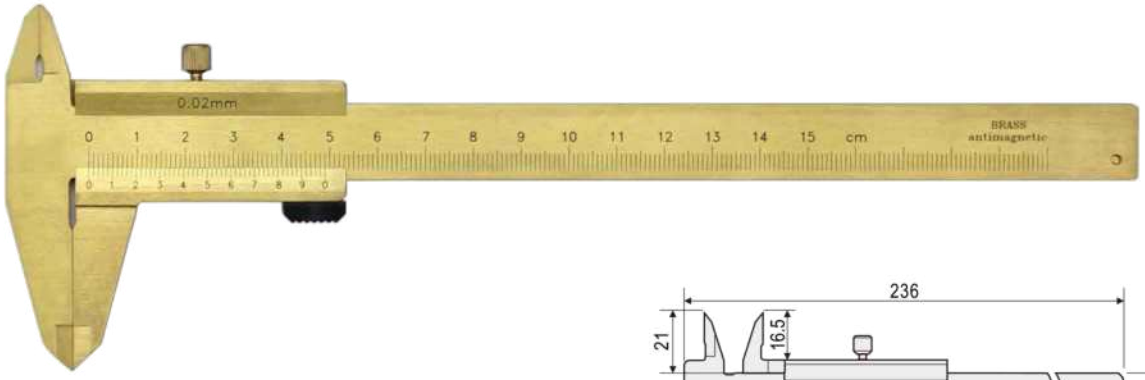

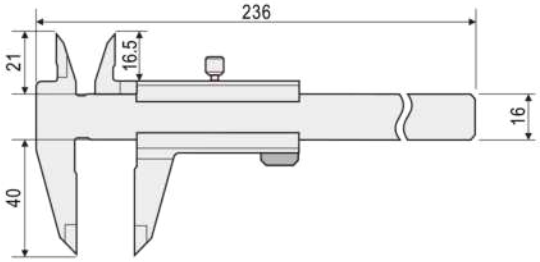

主要特点:
- 纯铜制造
- 可以测量外径、内径和台阶
- 防磁

FEATURES
- Pure copper material
- Used for OD, ID and step measurements
- Non-magnet block

货 号 Code NO.	测量范围 Measuring Range mm	分度值 Graduation mm	精度 Accuracy mm
141-102Cu	0-150	0.02	±0.03
141-103Cu	0-150	0.05	±0.05
141-102ECu	0-150	0.02/. 001"	±0.03
141-103ECu	0-150	0.05/1/128"	±0.05

双外爪游标卡尺

Vernier Caliper with Basic and Outside Measuring Jaws

GB/T | S/STL hardened

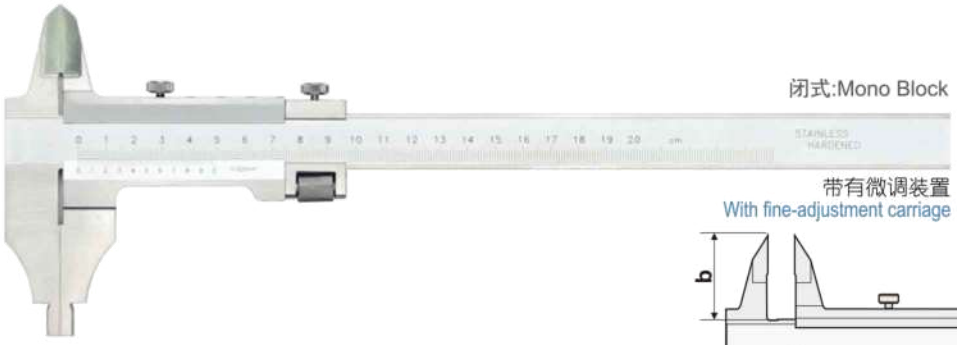

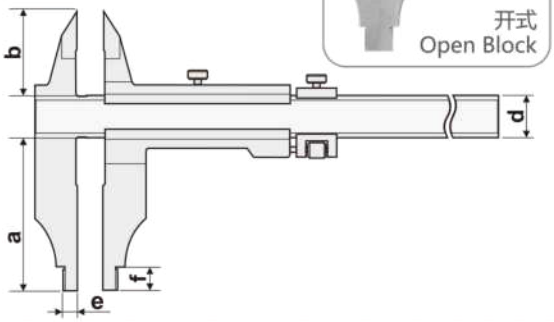

主要特点:

- 下爪为圆弧形内测量面更适于测量精密内孔，带有外测上爪

FEATURES

- Nib shaped jaws for ID and OD measurement, carrying upper jaws for OD measurements

货号Code NO. 闭式Mono Block	货号Code NO. 开式Open Block	测量范围 Measuring Range mm	分度值 Graduation mm	精度 Accuracy mm	重量 Weight kg	a mm	b mm	d mm	f mm	e mm
141-600	141-640	0-200	0.02	± 0.03	–	60	40	20	12	5
141-600-1	141-640-1	0-200	0.02	± 0.03	–	75	40	20	12	5
141-601	141-641	0-200	0.05	± 0.05	–	60	40	20	12	5
141-601-1	141-641-1	0-200	0.05	± 0.05	–	75	40	20	12	5
141-620	141-660	0-200	0.02/. 001"	± 0.03	–	60	40	20	12	5
141-620-1	141-660-1	0-200	0.02/. 001"	± 0.03	–	75	40	20	12	5
141-621	141-661	0-200	0.05/1/128"	± 0.05	–	60	40	20	12	5
141-621-1	141-661-1	0-200	0.05/1/128"	± 0.05	–	75	40	20	12	5
141-602	141-642	0-250	0.02	± 0.03	–	60	40	20	12	5
141-602-1	141-642-1	0-250	0.02	± 0.03	–	75	40	20	12	5
141-603	141-643	0-250	0.05	± 0.05	–	60	40	20	12	5
141-603-1	141-643-1	0-250	0.05	± 0.05	–	75	40	20	12	5
141-622	141-662	0-250	0.02/. 001"	± 0.03	–	60	40	20	12	5
141-622-1	141-662-1	0-250	0.02/. 001"	± 0.03	–	75	40	20	12	5
141-623	141-663	0-250	0.05/1/128"	± 0.05	–	60	40	20	12	5
141-623-1	141-663-1	0-250	0.05/1/128"	± 0.05	–	75	40	20	12	5
141-604	141-644	0-300	0.02	± 0.04	–	60	40	20	12	5
141-604-1	141-644-1	0-300	0.02	± 0.05	–	90	40	20	12	5
141-605	141-645	0-300	0.05	± 0.05	–	60	40	20	12	5
141-605-1	141-645-1	0-300	0.05	± 0.05	–	90	40	20	12	5
141-624	141-664	0-300	0.02/. 001"	± 0.04	–	60	40	20	12	5
141-624-1	141-664-1	0-300	0.02/. 001"	± 0.05	–	90	40	20	12	5
141-625	141-665	0-300	0.05/1/128"	± 0.05	–	60	40	20	12	5
141-625-1	141-665-1	0-300	0.05/1/128"	± 0.05	–	90	40	20	12	5
141-606	141-646	0-400	0.02	± 0.04	–	100	56	24	18	10
141-606-1	141-646-1	0-400	0.02	± 0.04	–	125	56	24	18	10
141-607	141-647	0-400	0.05	± 0.10	–	100	56	24	18	10
141-607-1	141-647-1	0-400	0.05	± 0.10	–	125	56	24	18	10
141-626	141-666	0-400	0.02/. 001"	± 0.04	–	100	56	24	18	10
141-626-1	141-666-1	0-400	0.02/. 001"	± 0.04	–	125	56	24	18	10
141-627	141-667	0-400	0.05/1/128"	± 0.10	–	100	56	24	18	10
141-627E-1	141-667-1	0-400	0.05/1/128"	± 0.10	–	125	56	24	18	10
141-608	141-648	0-500	0.02	± 0.05	1.3	100	56	24	18	10
141-608-1S	141-648-1S	0-500	0.02	± 0.05	1.3	150	56	24	18	10
141-608-2	141-648-2	0-500	0.02	± 0.07	2.2	200	67	31	24	10
141-609	141-649	0-500	0.05	± 0.10	1.3	100	56	24	18	10
141-609-1S	141-649-1S	0-500	0.05	± 0.10	1.3	150	56	24	18	10
141-609-2	141-649-2	0-500	0.05	± 0.10	2.2	200	67	31	24	10
141-628	141-668	0-500	0.02/. 001"	± 0.05	1.3	100	56	24	18	10
141-628-1S	141-668-1S	0-500	0.02/. 001"	± 0.05	1.3	150	56	24	18	10
141-628-2	141-668-2	0-500	0.02/. 001"	± 0.07	2.2	200	67	31	24	10
141-629	141-669	0-500	0.05/1/128"	± 0.10	1.3	100	56	24	18	10
141-629-1S	141-669-1S	0-500	0.05/1/128"	± 0.10	1.3	150	56	24	18	10
141-629-2	141-669-2	0-500	0.05/1/128"	± 0.10	2.2	200	67	31	24	10
141-610-0	141-650-0	0-600	0.02	± 0.05	1.3	100	56	24	18	10
141-610S	141-650S	0-600	0.02	± 0.05	1.3	150	56	24	18	10
141-610-1	141-650-1	0-600	0.02	± 0.07	2.5	200	67	31	24	10
141-611-0	141-651-0	0-600	0.05	± 0.10	1.3	100	56	24	18	10
141-611S	141-651S	0-600	0.05	± 0.10	1.3	150	56	24	18	10
141-611-1	141-651-1	0-600	0.05	± 0.10	2.5	200	67	31	24	10
141-630-0	141-670-0	0-600	0.02/. 001"	± 0.05	1.3	100	56	24	18	10
141-630S	141-670S	0-600	0.02/. 001"	± 0.05	1.3	150	56	24	18	10
141-630-1	141-670-1	0-600	0.02/. 001"	± 0.07	2.5	200	67	31	24	10
141-631-0	141-671-0	0-600	0.05/1/128"	± 0.10	1.3	100	56	24	18	10
141-631S	141-671S	0-600	0.05/1/128"	± 0.10	1.3	150	56	24	18	10
141-631-1	141-671-1	0-600	0.05/1/128"	± 0.10	2.5	200	67	31	24	10
141-612	141-652	0-800	0.02	± 0.06	2.6	150	67	31	24	10
141-612-1	141-652-1	0-800	0.02	± 0.08	2.8	200	67	31	24	10
141-613	141-653	0-800	0.05	± 0.10	2.6	150	67	31	24	10
141-613-1	141-653-1	0-800	0.05	± 0.10	2.8	200	67	31	24	10

货号Code NO. 闭式Mono Block	货号Code NO. 开式Open Block	测量范围 Measuring Range mm	分度值 Graduation mm	精度 Accuracy mm	重量 Weight kg	a mm	b mm	d mm	f mm	e mm
141-632	141-672	0-800	0.02/. 001"	± 0.06	2.6	150	67	31	24	10
141-632-1	141-672-1	0-800	0.02/. 001"	± 0.08	2.8	200	67	31	24	10
141-633	141-673	0-800	0.05/1/128"	± 0.10	2.6	150	67	31	24	10
141-633-1	141-673-1	0-800	0.05/1/128"	± 0.10	2.8	200	67	31	24	10
141-614	141-654	0-1000	0.02	± 0.07	2.7	150	67	31	24	10
141-614-1	141-654-1	0-1000	0.02	± 0.09	3.3	200	67	31	24	10
141-615	141-655	0-1000	0.05	± 0.10	2.7	150	67	31	24	10
141-615-1	141-655-1	0-1000	0.05	± 0.15	3.3	200	67	31	24	10
141-634	141-674	0-1000	0.02/. 001"	± 0.07	2.7	150	67	31	24	10
141-634-1	141-674-1	0-1000	0.02/. 001"	± 0.09	3.3	200	67	31	24	10
141-635	141-675	0-1000	0.05/1/128"	± 0.10	2.7	150	67	31	24	10
141-635-1	141-675-1	0-1000	0.05/1/128"	± 0.15	3.3	200	67	31	24	10
141-616-0	141-656-0	0-1500	0.02	± 0.11	6.0	150	80	42	24	10
141-616	141-656	0-1500	0.02	± 0.11	6.3	200	80	42	24	10
141-616-2	141-656-2	0-1500	0.02	± 0.15	9.3	300	80	50	24	10
141-617-0	141-657-0	0-1500	0.05	± 0.15	6.0	150	80	42	24	10
141-617	141-657	0-1500	0.05	± 0.15	6.3	200	80	42	24	10
141-617-2	141-657-2	0-1500	0.05	± 0.20	9.3	300	80	50	24	10
141-636-0	141-676-0	0-1500	0.02/. 001"	± 0.11	6.0	150	80	42	24	10
141-636	141-676	0-1500	0.02/. 001"	± 0.11	6.3	200	80	42	24	10
141-636-2	141-676-2	0-1500	0.02/. 001"	± 0.15	9.3	300	80	50	24	10
141-637-0	141-677-0	0-1500	0.05/1/128"	± 0.15	6.0	150	80	42	24	10
141-637	141-677	0-1500	0.05/1/128"	± 0.15	6.3	200	80	42	24	10
141-637-2	141-677-2	0-1500	0.05/1/128"	± 0.20	9.3	300	80	50	24	10
141-618-0	141-658-0	0-2000	0.02	± 0.14	7.3	150	80	42	24	10
141-618	141-658	0-2000	0.02	± 0.14	7.9	200	80	42	24	10
141-618-2	141-658-2	0-2000	0.02	± 0.18	11.1	300	80	50	24	10
141-619-0	141-659-0	0-2000	0.05	± 0.20	7.3	150	80	42	24	10
141-619	141-659	0-2000	0.05	± 0.20	7.9	200	80	42	24	10
141-619-2	141-659-2	0-2000	0.05	± 0.25	11.1	300	80	50	24	10
141-638-0	141-678-0	0-2000	0.02/. 001"	± 0.14	7.3	150	80	42	24	10
141-638	141-678	0-2000	0.02/. 001"	± 0.14	7.9	200	80	42	24	10
141-638-2	141-678-2	0-2000	0.02/. 001"	± 0.18	11.1	300	80	50	24	10
141-639-0	141-679-0	0-2000	0.05/1/128"	± 0.20	7.3	150	80	42	24	10
141-639	141-679	0-2000	0.05/1/128"	± 0.20	7.9	200	80	42	24	10
141-639-2	141-679-2	0-2000	0.05/1/128"	± 0.25	11.1	300	80	50	24	10
141-680	141-840-0	0-2500	0.02	± 0.22	8.3	150	80	50	24	10
141-680-1	141-840	0-2500	0.02	± 0.22	9.0	200	80	50	24	10
141-680-3	141-840-2	0-2500	0.02	± 0.24	12.6	300	80	50	24	10
141-681	141-841-0	0-2500	0.05	± 0.25	8.3	150	80	50	24	10
141-681-1	141-841	0-2500	0.05	± 0.25	9.0	200	80	50	24	10
141-681-3	141-841-2	0-2500	0.05	± 0.30	12.6	300	80	50	24	10
141-690	141-860	0-2500	0.02/. 001"	± 0.22	8.3	150	80	50	24	10
141-690-1	141-860-1	0-2500	0.02/. 001"	± 0.22	9.0	200	80	50	24	10
141-690-3	141-860-3	0-2500	0.02/. 001"	± 0.24	12.6	300	80	50	24	10
141-691	141-861	0-2500	0.05/1/128"	± 0.25	8.3	150	80	50	24	10
141-691-1	141-861-1	0-2500	0.05/1/128"	± 0.25	9.0	200	80	50	24	10
141-691-3	141-861-3	0-2500	0.05/1/128"	± 0.30	12.6	300	80	50	24	10
141-682	141-842	0-3000	0.02	± 0.26	12.8	150	80	50	24	10
141-682-1	141-842-1	0-3000	0.02	± 0.26	13.2	200	80	50	24	10
141-682-3	141-842-2	0-3000	0.02	± 0.28	14.0	300	80	50	24	10
141-683	141-843	0-3000	0.05	± 0.30	12.8	150	80	50	24	10
141-683-1	141-843-1	0-3000	0.05	± 0.30	13.2	200	80	50	24	10
141-683-3	141-843-2	0-3000	0.05	± 0.35	14.0	300	80	50	24	10
141-692	141-862	0-3000	0.02/. 001"	± 0.26	12.8	150	80	50	24	10
141-692-1	141-862-1	0-3000	0.02/. 001"	± 0.26	13.2	200	80	50	24	10
141-692-3	141-862-2	0-3000	0.02/. 001"	± 0.27	14.0	300	80	50	24	10
141-693	141-863	0-3000	0.05/1/128"	± 0.30	12.8	150	80	50	24	10
141-693-1	141-863-1	0-3000	0.05/1/128"	± 0.30	13.2	200	80	50	24	10
141-693-3	141-863-2	0-3000	0.05/1/128"	± 0.35	14.0	300	80	50	24	10

B

双内爪游标卡尺

Vernier Caliper with Basic and Inside Measuring Jaws

GB/T | S/STL hardened

闭式:Mono Block

带有微调装置
With fine-adjustment carriage

开式
Open Block

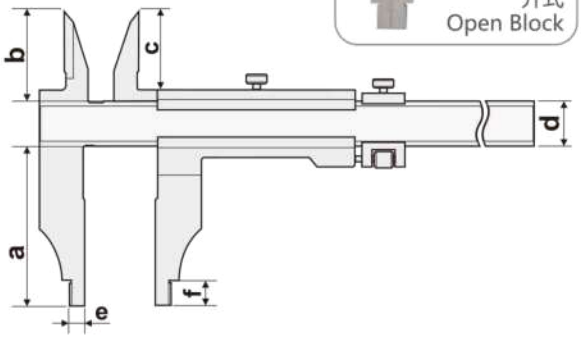

主要特点:

- 下爪为圆弧形内测量面更适于测量精密内孔，带有内测上爪

FEATURES

- Nib shaped jaws for ID and OD measurement, carrying upper jaws for ID measurements

货号Code NO. 闭式Mono Block	货号Code NO. 开式Open Block	测量范围 Measuring Range mm	分度值 Graduation mm	精度 Accuracy mm	重量 Weight kg	a mm	b mm	c mm	d mm	f mm	e mm
141-176	141-560	0-200	0.02	±0.03	–	60	38	26	20	12	5
141-176-1	141-560-1	0-200	0.02	±0.03	–	75	38	26	20	12	5
141-177	141-561	0-200	0.05	±0.05	–	60	38	26	20	12	5
141-177-1	141-561-1	0-200	0.05	±0.05	–	75	38	26	20	12	5
141-196	141-580	0-200	0.02/.001"	±0.03	–	60	38	26	20	12	5
141-196-1	141-580-1	0-200	0.02/.001"	±0.03	–	75	38	26	20	12	5
141-197	141-581	0-200	0.05/1/128"	±0.05	–	60	38	26	20	12	5
141-197-1	141-581-1	0-200	0.05/1/128"	±0.05	–	75	38	26	20	12	5
141-178	141-562	0-250	0.02	±0.03	–	60	38	26	20	12	5
141-178-1	141-562-1	0-250	0.02	±0.03	–	75	38	26	20	12	5
141-179	141-563	0-250	0.05	±0.05	–	60	38	26	20	12	5
141-179-1	141-563-1	0-250	0.05	±0.05	–	75	38	26	20	12	5
141-198	141-582	0-250	0.02/.001"	±0.03	–	60	38	26	20	12	5
141-198-1	141-582-1	0-250	0.02/.001"	±0.03	–	75	38	26	20	12	5
141-199	141-583	0-250	0.05/1/128"	±0.05	–	60	38	26	20	12	5
141-199-1	141-583-1	0-250	0.05/1/128"	±0.05	–	75	38	26	20	12	5
141-180	141S-564	0-300	0.02	±0.04	–	60	38	26	20	12	5
141-180-1	141S-564-3	0-300	0.02	±0.04	–	90	42	30	20	12	5
141-181	141S-565	0-300	0.05	±0.05	–	60	38	26	20	12	5
141-181-1	141S-565-3	0-300	0.05	±0.05	–	90	42	30	20	12	5
141-200	141S-564E	0-300	0.02/.001"	±0.04	–	60	38	26	20	12	5
141-200-1	141S-564E-3	0-300	0.02/.001"	±0.04	–	90	42	30	20	12	5
141-201	141S-565E	0-300	0.05/1/128"	±0.05	–	60	38	26	20	12	5
141-201-1	141S-565E-3	0-300	0.05/1/128"	±0.05	–	90	42	30	20	12	5
141-182	141-566	0-400	0.02	±0.04	–	100	46	39	24	18	10
141-182-1	141-566-1	0-400	0.02	±0.04	–	125	46	39	24	18	10
141-183	141-567	0-400	0.05	±0.10	–	100	46	39	24	18	10
141-183-1	141-566-1E	0-400	0.05	±0.10	–	125	46	39	24	18	10
141-202	141-566E	0-400	0.02/.001"	±0.04	–	100	46	39	24	18	10
141-202-1	141-567-1	0-400	0.02/.001"	±0.04	–	125	46	39	24	18	10
141-203	141-567	0-400	0.05/1/128"	±0.10	–	100	46	39	24	18	10
141-203-1	141-567-1E	0-400	0.05/1/128"	±0.10	–	125	46	39	24	18	10
141-184	141-568	0-500	0.02	±0.05	1.3	100	46	39	24	18	10
141-184-1S	141-568-1S	0-500	0.02	±0.05	1.3	150	46	39	24	18	10
141-184-2	141-568-2	0-500	0.02	±0.07	2.2	200	60	51.5	31	24	10
141-185	141-569	0-500	0.05	±0.10	1.3	100	46	39	24	18	10
141-185-1S	141-569-1S	0-500	0.05	±0.10	1.3	150	46	39	24	18	10
141-185-2	141-569-2	0-500	0.05	±0.10	2.2	200	60	51.5	31	24	10
141-204	141-568E	0-500	0.02/.001"	±0.05	1.3	100	46	39	24	18	10
141-204-1S	141-568-1SE	0-500	0.02/.001"	±0.05	1.3	150	46	39	24	18	10
141-204-2	141-568-2E	0-500	0.02/.001"	±0.07	2.2	200	60	51.5	31	24	10
141-205	141-569E	0-500	0.05/1/128"	±0.10	1.3	100	46	39	24	18	10
141-205-1S	141-569-1SE	0-500	0.05/1/128"	±0.10	1.3	150	46	39	24	18	10
141-205-2	141-569-2E	0-500	0.05/1/128"	±0.10	2.2	200	60	51.5	31	24	10
141-186	141-570	0-600	0.02	±0.05	1.3	100	46	39	24	18	10
141-186-1S	141-570-1S	0-600	0.02	±0.05	1.3	150	46	39	24	18	10
141-186-2	141-570-2	0-600	0.02	±0.07	2.5	200	60	51.5	31	24	10
141-187	141-571	0-600	0.05	±0.10	1.3	100	46	39	24	18	10

货号Code NO. 闭式Mono Block	货号Code NO. 开式Open Block	测量范围 Measuring Range mm	分度值 Graduation mm	精度 Accuracy mm	重量 Weight kg	a mm	b mm	c mm	d mm	f mm	e mm
141-187-1S	141-571-1E	0-600	0.05	±0.10	1.3	150	46	39	24	18	10
141-187-2	141-571-2	0-600	0.05	±0.10	2.5	200	60	51.5	31	24	10
141-206	141-570E	0-600	0.02/.001"	±0.05	1.3	100	46	39	24	18	10
141-206-1S	141-570-1SE	0-600	0.02/.001"	±0.05	1.3	150	46	39	24	18	10
141-206-2	141-570-2E	0-600	0.02/.001"	±0.07	2.5	200	60	51.5	31	24	10
141-207	141-571E	0-600	0.05/1/128"	±0.10	1.3	100	46	39	24	18	10
141-207-1S	141-571-1SE	0-600	0.05/1/128"	±0.10	1.3	150	46	39	24	18	10
141-207-2	141-571-2E	0-600	0.05/1/128"	±0.10	2.5	200	60	51.5	31	24	10
141-188	141-572	0-800	0.02	±0.06	2.6	150	60	51.5	31	24	10
141-188-1	141-572-1	0-800	0.02	±0.08	2.8	200	60	51.5	31	24	10
141-189	141-573	0-800	0.05	±0.10	2.6	150	60	51.5	31	24	10
141-189-1	141-573-1	0-800	0.05	±0.10	2.8	200	60	51.5	31	24	10
141-208	141-572E	0-800	0.02/. 001"	±0.06	2.6	150	60	51.5	31	24	10
141-208-1	141-572-1E	0-800	0.02/. 001"	±0.08	2.8	200	60	51.5	31	24	10
141-209	141-573E	0-800	0.05/1/128"	±0.10	2.6	150	60	51.5	31	24	10
141-209-1	141-573-1E	0-800	0.05/1/128"	±0.10	2.8	200	60	51.5	31	24	10
141-190	141-574	0-1000	0.02	±0.07	2.7	150	60	51.5	31	24	10
141-190-1	141-574-1	0-1000	0.02	±0.09	3.3	200	60	51.5	31	24	10
141-191	141-575	0-1000	0.05	±0.10	2.7	150	60	51.5	31	24	10
141-191-1	141-575-1	0-1000	0.05	±0.15	3.3	200	60	51.5	31	24	10
141-210	141-574E	0-1000	0.02/. 001"	±0.07	2.7	150	60	51.5	31	24	10
141-210-1	141-574-1E	0-1000	0.02/. 001"	±0.09	3.3	200	60	51.5	31	24	10
141-211	141-575E	0-1000	0.05/1/128"	±0.10	2.7	150	60	51.5	31	24	10
141-211-1	141-575-1E	0-1000	0.05/1/128"	±0.15	3.3	200	60	51.5	31	24	10
141-192	141-576	0-1500	0.02	±0.11	6.0	150	70	60	42	24	10
141-192-1	141-576-1	0-1500	0.02	±0.11	6.3	200	70	60	42	24	10
141-192-3	141-576-3	0-1500	0.02	±0.15	9.3	300	70	60	42	24	10
141-193	141-577	0-1500	0.05	±0.15	6.0	150	70	60	42	24	10
141-193-1	141-577-1	0-1500	0.05	±0.20	6.3	200	70	60	42	24	10
141-193-3	141-577-3	0-1500	0.05	±0.20	9.3	300	70	60	42	24	10
141-192E	141-576E	0-1500	0.02/. 001"	±0.11	6.0	150	70	60	42	24	10
141-192-1E	141-576-1E	0-1500	0.02/. 001"	±0.11	6.3	200	70	60	42	24	10
141-192-3E	141-576-3E	0-1500	0.02/. 001"	±0.15	9.3	300	70	60	42	24	10
141-193E	141-577E	0-1500	0.05/1/128"	±0.15	6.0	150	70	60	42	24	10
141-193-1E	141-577-1E	0-1500	0.05/1/128"	±0.20	6.3	200	70	60	42	24	10
141-193-3E	141-577-3E	0-1500	0.05/1/128"	±0.20	9.3	300	70	60	42	24	10
141-194	141-578	0-2000	0.02	±0.14	7.3	150	70	60	42	24	10
141-194-1	141-578-1	0-2000	0.02	±0.14	7.9	200	70	60	42	24	10
141-194-3	141-578-3	0-2000	0.02	±0.20	11.1	300	70	60	42	24	10
141-195	141-579	0-2000	0.05	±0.20	7.3	150	70	60	42	24	10
141-195-1	141-579-1	0-2000	0.05	±0.20	7.9	200	70	60	42	24	10
141-195-3	141-579-3	0-2000	0.05	±0.25	11.1	300	70	60	42	24	10
141-194E	141-578E	0-2000	0.02/. 001"	±0.14	7.3	150	70	60	42	24	10
141-194-1E	141-578-1E	0-2000	0.02/. 001"	±0.14	7.9	200	70	60	42	24	10
141-194-3E	141-578-3E	0-2000	0.02/. 001"	±0.20	11.1	300	70	60	42	24	10
141-195E	141-579E	0-2000	0.05/1/128"	±0.20	7.3	150	70	60	42	24	10
141-195-1E	141-579-1E	0-2000	0.05/1/128"	±0.20	7.9	200	70	60	42	24	10
141-195-3E	141-579-3E	0-2000	0.05/1/128"	±0.25	11.1	300	70	60	42	24	10

双刀爪游标卡尺
Vernier Caliper with Standard Jaws

GB/T | S/STL hardened

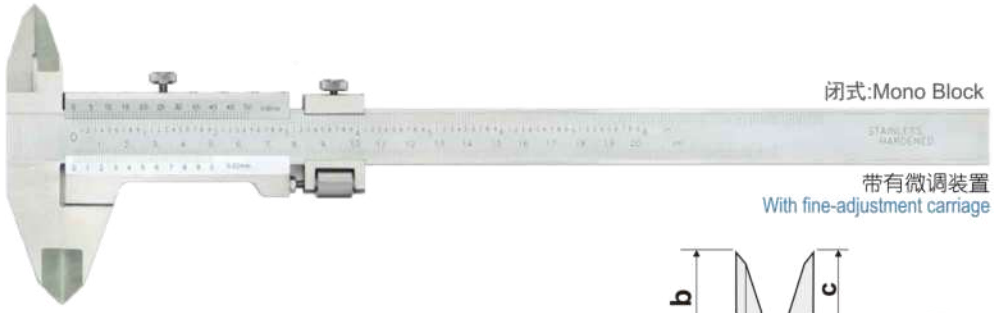

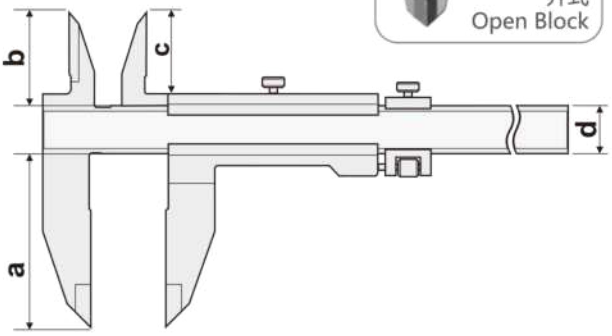

主要特点:
- 下爪为加长的刀口爪形可用于测量凹槽尺寸，带有内测上爪

FEATURES
- Easy used for large OD and ID measurements

货号Code NO. 闭式Mono Block	货号Code NO. 开式Open Block	测量范围 Measuring Range mm	分度值 Graduation mm	精度 Accuracy mm	重量 Weight kg	a mm	b mm	c mm	d mm
141-450	141-480	0-200	0.02	±0.03	–	50	30	24.5	20
141-450-1	141-480-1	0-200	0.02	±0.03	–	75	30	24.5	20
141-451	141-481	0-200	0.05	±0.05	–	50	30	24.5	20
141-451-1	141-481-1	0-200	0.05	±0.05	–	75	30	24.5	20
141-450E	141-480E	0-200	0.02/.001"	±0.03	–	50	30	24.5	20
141-450-1E	141-480-1E	0-200	0.02/.001"	±0.03	–	75	30	24.5	20
141-451E	141-481E	0-200	0.05/1/128"	±0.05	–	50	30	24.5	20
141-451-1E	141-481-1E	0-200	0.05/1/128"	±0.05	–	75	30	24.5	20
141-452	141-482	0-250	0.02	±0.03	–	60	30	24.5	20
141-452-1	141-482-1	0-250	0.02	±0.03	–	75	30	24.5	20
141-453	141-483	0-250	0.05	±0.05	–	60	30	24.5	20
141-453-1	141-483-1	0-250	0.05	±0.05	–	75	30	24.5	20
141-452E	141-482E	0-250	0.02/.001"	±0.03	–	60	30	24.5	20
141-452-1E	141-482-1E	0-250	0.02/.001"	±0.03	–	75	30	24.5	20
141-453E	141-483E	0-250	0.05/1/128"	±0.05	–	60	30	24.5	20
141-453-1E	141-483-1E	0-250	0.05/1/128"	±0.05	–	75	30	24.5	20
141-454	141-484	0-300	0.02	±0.04	–	60	30	24.5	20
141-454-1	141-484-1	0-300	0.02	±0.04	–	90	30	24.5	20
141-455	141-485	0-300	0.05	±0.05	–	60	30	24.5	20
141-455-1	141-485-1	0-300	0.05	±0.05	–	90	30	24.5	20
141-454E	141-484E	0-300	0.02/.001"	±0.04	–	60	30	24.5	20
141-454-1E	141-484-1E	0-300	0.02/.001"	±0.04	–	90	30	24.5	20
141-455E	141-485E	0-300	0.05/1/128"	±0.05	–	60	30	24.5	20
141-455-1E	141-485-1E	0-300	0.05/1/128"	±0.05	–	90	30	24.5	20
141-456	141-486	0-400	0.02	±0.04	–	100	46	39	24
141-456-1	141-486-1	0-400	0.02	±0.04	–	125	46	39	24
141-457	141-487	0-400	0.05	±0.10	–	100	46	39	24
141-457-1	141-487-1	0-400	0.05	±0.10	–	125	46	39	24
141-456E	141-486E	0-400	0.02/.001"	±0.04	–	100	46	39	24
141-456-1E	141-486-1E	0-400	0.02/.001"	±0.04	–	125	46	39	24
141-457E	141-487E	0-400	0.05/1/128"	±0.10	–	100	46	39	24
141-457-1E	141-487-1E	0-400	0.05/1/128"	±0.10	–	125	46	39	24
141-458	141-488	0-500	0.02	±0.05	1.3	100	46	39	24
141-458-1S	141-488-1S	0-500	0.02	±0.05	1.3	150	46	39	24
141-458-2	141-488-2	0-500	0.02	±0.07	2.2	200	60	51.5	31
141-459	141-489	0-500	0.05	±0.10	1.3	100	46	39	24
141-459-1S	141-489-1S	0-500	0.05	±0.10	1.3	150	46	39	24
141-459-2	141-489-2	0-500	0.05	±0.10	2.2	200	60	51.5	31
141-458E	141-488E	0-500	0.02/.001"	±0.05	1.3	100	46	39	24
141-458-1SE	141-488-1SE	0-500	0.02/.001"	±0.05	1.3	150	46	39	24
141-458-2E	141-488-2E	0-500	0.02/.001"	±0.07	2.2	200	60	51.5	31
141-459E	141-489E	0-500	0.05/1/128"	±0.10	1.3	100	46	39	24
141-459-1SE	141-489-1SE	0-500	0.05/1/128"	±0.10	1.3	150	46	39	24
141-459-2E	141-489-2E	0-500	0.05/1/128"	±0.10	2.2	200	60	51.5	31
141-460	141-490	0-600	0.02	±0.05	1.3	100	46	39	24
141-460-1S	141-490-1S	0-600	0.02	±0.05	1.3	150	46	39	24
141-460-2	141-490-2	0-600	0.02	±0.07	2.5	200	60	51.5	31
141-461	141-491	0-600	0.05	±0.10	1.3	100	46	39	24

货号Code NO. 闭式Mono Block	货号Code NO. 开式Open Block	测量范围 Measuring Range mm	分度值 Graduation mm	精度 Accuracy mm	重量 Weight kg	a mm	b mm	c mm	d mm
141-461-1S	141-491-1S	0-600	0.05	±0.10	1.3	150	46	39	24
141-461-2	141-491-2	0-600	0.05	±0.10	2.5	200	60	51.5	31
141-460E	141-490E	0-600	0.02/.001"	±0.05	1.3	100	46	39	24
141-460-1SE	141-490-1SE	0-600	0.02/.001"	±0.05	1.3	150	46	39	24
141-460-2E	141-490-2E	0-600	0.02/.001"	±0.07	2.5	200	60	51.5	31
141-461E	141-491E	0-600	0.05/1/128"	±0.10	1.3	100	46	39	24
141-461-1SE	141-491-1SE	0-600	0.05/1/128"	±0.10	1.3	150	46	39	24
141-461-2E	141-491-2E	0-600	0.05/1/128"	±0.10	2.5	200	60	51.5	31
141-462	141-492	0-800	0.02	±0.06	2.6	150	60	51.5	31
141-462-1	141-492-1	0-800	0.02	±0.08	2.8	200	60	51.5	31
141-463	141-493	0-800	0.05	±0.10	2.6	150	60	51.5	31
141-463-1	141-493-1	0-800	0.05	±0.10	2.8	200	60	51.5	31
141-462E	141-492E	0-800	0.02/. 001"	±0.06	2.6	150	60	51.5	31
141-462-1E	141-492-1E	0-800	0.02/. 001"	±0.08	2.8	200	60	51.5	31
141-463E	141-493E	0-800	0.05/1/128"	±0.10	2.6	150	60	51.5	31
141-463-1E	141-493-1E	0-800	0.05/1/128"	±0.10	2.8	200	60	51.5	31
141-464	141-494	0-1000	0.02	±0.07	2.7	150	60	51.5	31
141-464-1	141-494-1	0-1000	0.02	±0.09	3.3	200	60	51.5	31
141-465	141-495	0-1000	0.05	±0.10	2.7	150	60	51.5	31
141-465-1	141-495-1	0-1000	0.05	±0.15	3.3	200	60	51.5	31
141-464E	141-494E	0-1000	0.02/. 001"	±0.07	2.7	150	60	51.5	31
141-464-1E	141-494-1E	0-1000	0.02/. 001"	±0.09	3.3	200	60	51.5	31
141-465E	141-495E	0-1000	0.05/1/128"	±0.10	2.7	150	60	51.5	31
141-465-1E	141-495-1E	0-1000	0.05/1/128"	±0.15	3.3	200	60	51.5	31
141-466	141-496	0-1500	0.02	±0.11	6.0	150	70	60	42
141-466-1	141-496-1	0-1500	0.02	±0.14	6.3	200	70	60	42
141-466-3	141-496-3	0-1500	0.02	±0.16	9.3	300	70	60	42
141-467	141-497	0-1500	0.05	±0.15	6.0	150	70	60	42
141-467-1	141-497-1	0-1500	0.05	±0.20	6.3	200	70	60	42
141-467-3	141-497-3	0-1500	0.05	±0.20	9.3	300	70	60	42
141-466E	141-496E	0-1500	0.02/. 001"	±0.11	6.0	150	70	60	42
141-466-1E	141-496-1E	0-1500	0.02/. 001"	±0.14	6.3	200	70	60	42
141-466-3E	141-496-3E	0-1500	0.02/. 001"	±0.16	9.3	300	70	60	42
141-467E	141-497E	0-1500	0.05/1/128"	±0.15	6.0	150	70	60	42
141-467-1E	141-497-1E	0-1500	0.05/1/128"	±0.20	6.3	200	70	60	42
141-467-3E	141-497-3E	0-1500	0.05/1/128"	±0.20	9.3	300	70	60	42
141-468	141-498	0-2000	0.02	±0.14	7.3	150	70	60	42
141-468-1	141-498-1	0-2000	0.02	±0.14	7.9	200	70	60	42
141-468-3	141-498-3	0-2000	0.02	±0.24	11.1	300	70	60	42
141-469	141-499	0-2000	0.05	±0.20	7.3	150	70	60	42
141-469-1	141-499-1	0-2000	0.05	±0.20	7.9	200	70	60	42
141-469-3	141-499-3	0-2000	0.05	±0.30	11.1	300	70	60	42
141-468E	141-498E	0-2000	0.02/. 001"	±0.14	7.3	150	70	60	42
141-468-1E	141-498-1E	0-2000	0.02/. 001"	±0.14	7.9	200	70	60	42
141-468-3E	141-498-3E	0-2000	0.02/. 001"	±0.24	11.1	300	70	60	42
141-469E	141-499E	0-2000	0.05/1/128"	±0.20	7.3	150	70	60	42
141-469-1E	141-499-1E	0-2000	0.05/1/128"	±0.20	7.9	200	70	60	42
141-469-3E	141-499-3E	0-2000	0.05/1/128"	±0.30	11.1	300	70	60	42

B

单向爪游标卡尺

Vernier Caliper with Basic Jaws

GB/T | S/STL hardened

开式
Open Block

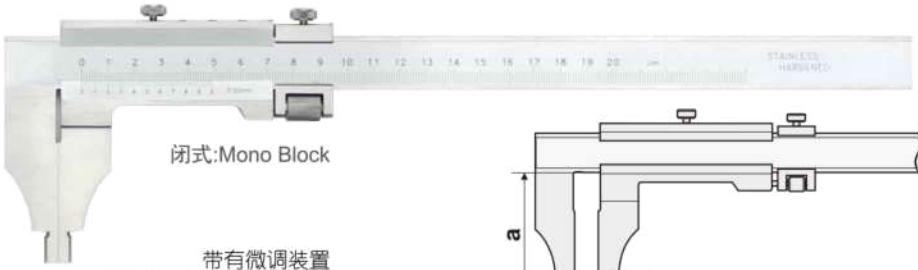

闭式:Mono Block

带有微调装置
With fine-adjustment carriage

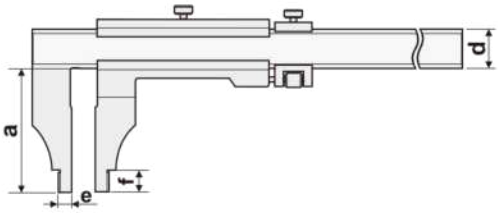

主要特点:

- 下爪为圆弧形外测量面更适于测量精密内孔

FEATURES

- Nib shaped jaws for ID and OD measurements

货号Code NO. 闭式Mono Block	货号Code NO. 开式Open Block	测量范围 Measuring Range mm	分度值 Graduation mm	精度 Accuracy mm	重量 Weight kg	a mm	d mm	f mm	e mm
141-700	141-740	0-200	0.02	± 0.03	–	65	20	12	5
141-700-1	141-740-1	0-200	0.02	± 0.03	–	80	20	12	5
141-701	141-741	0-200	0.05	± 0.05	–	65	20	12	5
141-701-1	141-741-1	0-200	0.05	± 0.05	–	80	20	12	5
141-720	141-760	0-200	0.02/. 001"	± 0.03	–	65	20	12	5
141-720-1	141-760-1	0-200	0.02/. 001"	± 0.03	–	80	20	12	5
141-721	141-761	0-200	0.05/1/128"	± 0.05	–	65	20	12	5
141-721-1	141-761-1	0-200	0.05/1/128"	± 0.05	–	80	20	12	5
141-702	141-742	0-250	0.02	± 0.03	–	65	20	12	5
141-702-1	141-742-1	0-250	0.02	± 0.03	–	80	20	12	5
141-703	141-743	0-250	0.05	± 0.05	–	65	20	12	5
141-703-1	141-743-1	0-250	0.05	± 0.05	–	80	20	12	5
141-722	141-762	0-250	0.02/. 001"	± 0.03	–	65	20	12	5
141-722-1	141-762-1	0-250	0.02/. 001"	± 0.03	–	80	20	12	5
141-723	141-763	0-250	0.05/1/128"	± 0.05	–	65	20	12	5
141-723-1	141-763-1	0-250	0.05/1/128"	± 0.05	–	80	20	12	5
141-704	141-744	0-300	0.02	± 0.04	–	65	20	12	5
141-704-1	141-744-1	0-300	0.02	± 0.04	–	90	20	12	5
141-705	141-745	0-300	0.05	± 0.05	–	65	20	12	5
141-705-1	141-745-1	0-300	0.05	± 0.05	–	90	20	12	5
141-724	141-764	0-300	0.02/. 001"	± 0.04	–	65	20	12	5
141-724-1	141-764-1	0-300	0.02/. 001"	± 0.04	–	90	20	12	5
141-725	141-765	0-300	0.05/1/128"	± 0.05	–	65	20	12	5
141-725-1	141-765-1	0-300	0.05/1/128"	± 0.05	–	90	20	12	5
141-706	141-746	0-400	0.02	± 0.04	–	100	24	18	10
141-706-1	141-746-1	0-400	0.02	± 0.04	–	125	24	18	10
141-707	141-747	0-400	0.05	± 0.10	–	100	24	18	10
141-707-1	141-747-1	0-400	0.05	± 0.10	–	125	24	18	10
141-726	141-766	0-400	0.02/. 001"	± 0.04	–	100	24	18	10
141-726-1	141-766-1	0-400	0.02/. 001"	± 0.04	–	125	24	18	10
141-727	141-767	0-400	0.05/1/128"	± 0.10	–	100	24	18	10
141-727-1	141-767-1	0-400	0.05/1/128"	± 0.10	–	125	24	18	10
141-708	141-748	0-500	0.02	± 0.05	1.3	100	24	18	10
–	141-748A	10-500	0.02	± 0.05	1.3	100	24	18	5
141-708-1S	141-748-1S	0-500	0.02	± 0.05	1.3	150	24	18	10
141-708-2	141-748-2	0-500	0.02	± 0.07	2.2	200	31	24	10
141-709	141-749	0-500	0.05	± 0.10	1.3	100	24	18	10
141-709-1S	141-749-1S	0-500	0.05	± 0.10	1.3	150	24	18	10
141-709-2	141-749-2	0-500	0.05	± 0.10	2.2	200	31	24	10
141-728	141-768	0-500	0.02/. 001"	± 0.05	1.3	100	24	18	10
141-728-1S	141-768-1S	0-500	0.02/. 001"	± 0.05	1.3	150	24	18	10
141-728-2	141-768-2	0-500	0.02/. 001"	± 0.07	2.2	200	31	24	10
141-729	141-769	0-500	0.05/1/128"	± 0.10	1.3	100	24	18	10
141-729-1S	141-769-1S	0-500	0.05/1/128"	± 0.10	1.3	150	24	18	10
141-729-2	141-769-2	0-500	0.05/1/128"	± 0.10	2.2	200	31	24	10
141-710	141-750	0-600	0.02	± 0.05	1.3	100	24	18	10
–	141-750A	10-600	0.02	± 0.05	1.3	100	24	18	5
141-710-1S	141-750-1S	0-600	0.02	± 0.05	1.3	150	24	18	10
141-710-2	141-750-2	0-600	0.02	± 0.07	2.5	200	31	24	10
141-711	141-751	0-600	0.05	± 0.10	1.3	100	24	18	10
141-711-1S	141-751-1S	0-600	0.05	± 0.10	1.3	150	24	18	10
141-711-2	141-751-2	0-600	0.05	± 0.10	2.5	200	31	24	10
141-730	141-770	0-600	0.02/. 001"	± 0.05	1.3	100	24	18	10
141-730-1S	141-770-1S	0-600	0.02/. 001"	± 0.05	1.3	150	24	18	10
141-730-2	141-770-2	0-600	0.02/. 001"	± 0.07	2.5	200	31	24	10
141-731	141-771	0-600	0.05/1/128"	± 0.10	1.3	100	24	18	10
141-731-1S	141-771-1S	0-600	0.05/1/128"	± 0.10	1.3	150	24	18	10
141-731-2	141-771-2	0-600	0.05/1/128"	± 0.10	2.5	200	31	24	10
141-712	141-752	0-800	0.02	± 0.06	2.6	150	31	24	10
141-712-1	141-752-1	0-800	0.02	± 0.08	2.8	200	31	24	10
141-713	141-753	0-800	0.05	± 0.10	2.6	150	31	24	10
141-731-1	141-753-1	0-800	0.05	± 0.10	2.8	200	31	24	10
141-732	141-772	0-800	0.02/. 001"	± 0.06	2.6	150	31	24	10
141-732-1	141-772-1	0-800	0.02/. 001"	± 0.08	2.8	200	31	24	10
141-733	141-773	0-800	0.05/1/128"	± 0.10	2.6	150	31	24	10
141-733-1	141-773-1	0-800	0.05/1/128"	± 0.10	2.8	200	31	24	10
141-714	141-754	0-1000	0.02	± 0.07	2.7	150	31	24	10

货号Code NO. 闭式Mono Block	货号Code NO. 开式Open Block	测量范围 Measuring Range mm	分度值 Graduation mm	精度 Accuracy mm	重量 Weight kg	a mm	d mm	f mm	e mm
141-714-1	141-754-1	0-1000	0.02	± 0.09	3.3	200	31	24	10
141-715	141-755	0-1000	0.05	± 0.10	2.7	150	31	24	10
141-715-1	141-755-1	0-1000	0.05	± 0.15	3.3	200	31	24	10
141-734	141-774	0-1000	0.02/. 001"	± 0.07	2.7	150	31	24	10
141-734-1	141-774-1	0-1000	0.02/. 001"	± 0.09	3.3	200	31	24	10
141-735	141-775	0-1000	0.05/1/128"	± 0.10	2.7	150	31	24	10
141-735-1	141-775-1	0-1000	0.05/1/128"	± 0.15	3.3	200	31	24	10
141-716	141-756	0-1500	0.02	± 0.11	6.0	150	42	24	10
141-716-1	141-756-1	0-1500	0.02	± 0.11	6.3	200	42	24	10
141-716-3	141-756-3	0-1500	0.02	± 0.15	9.3	300	50	24	10
141-717	141-757	0-1500	0.05	± 0.15	6.0	150	42	24	10
141-717-1	141-757-1	0-1500	0.05	± 0.20	6.3	200	42	24	10
141-717-3	141-757-3	0-1500	0.05	± 0.20	9.3	300	50	24	10
141-736	141-776	0-1500	0.02/. 001"	± 0.11	6.0	150	42	24	10
141-736-1	141-776-1	0-1500	0.02/. 001"	± 0.11	6.3	200	42	24	10
141-736-3	141-776-3	0-1500	0.02/. 001"	± 0.15	9.3	300	50	24	10
141-737	141-777	0-1500	0.05/1/128"	± 0.15	6.0	150	42	24	10
141-737-1	141-777-1	0-1500	0.05/1/128"	± 0.20	6.3	200	42	24	10
141-737-3	141-777-3	0-1500	0.05/1/128"	± 0.20	9.3	300	50	24	10
141-718	141-758	0-2000	0.02	± 0.14	7.3	150	42	24	10
141-718-1	141-758-1	0-2000	0.02	± 0.14	7.9	200	42	24	10
141-718-3	141-758-3	0-2000	0.02	± 0.18	11.1	300	50	24	10
141-719	141-759	0-2000	0.05	± 0.20	7.3	150	42	24	10
141-719-1	141-759-1	0-2000	0.05	± 0.20	7.9	200	42	24	10
141-719-3	141-759-3	0-2000	0.05	± 0.25	11.1	300	50	24	10
141-738	141-778	0-2000	0.02/. 001"	± 0.14	7.3	150	42	24	10
141-738-1	141-778-1	0-2000	0.02/. 001"	± 0.14	7.9	200	42	24	10
141-738-3	141-778-3	0-2000	0.02/. 001"	± 0.18	11.1	300	50	24	10
141-739	141-779	0-2000	0.05/1/128"	± 0.20	7.3	150	42	24	10
141-739-1	141-779-1	0-2000	0.05/1/128"	± 0.20	7.9	200	42	24	10
141-739-3	141-779-3	0-2000	0.05/1/128"	± 0.25	11.1	300	50	24	10
141-780	141-800	0-2500	0.02	± 0.22	8.3	150	50	24	10
141-780-1	141-800-1	0-2500	0.02	± 0.22	9.0	200	50	24	10
141-780-3	141-800-3	0-2500	0.02	± 0.24	12.6	300	50	24	10
141-781	141-801	0-2500	0.05	± 0.25	8.3	150	50	24	10
141-781-1	141-801-1	0-2500	0.05	± 0.25	9.0	200	50	24	10
141-781-3	141-801-3	0-2500	0.05	± 0.30	12.6	300	50	24	10
141-790	141-810	0-2500	0.02/. 001"	± 0.22	8.3	150	50	24	10
141-790-1	141-810-1	0-2500	0.02/. 001"	± 0.22	9.0	200	50	24	10
141-790-3	141-810-3	0-2500	0.02/. 001"	± 0.24	12.6	300	50	24	10
141-791	141-811	0-2500	0.05/1/128"	± 0.25	8.3	150	50	24	10
141-791-1	141-811-1	0-2500	0.05/1/128"	± 0.25	9.0	200	50	24	10
141-791-3	141-811-3	0-2500	0.05/1/128"	± 0.30	12.6	300	50	24	10
141-782	141-802	0-3000	0.02	± 0.26	12.8	150	50	24	10
141-782-1	141-802-1	0-3000	0.02	± 0.26	13.2	200	50	24	10
141-782-3	141-802-3	0-3000	0.02	± 0.28	14.0	300	50	24	10
141-783	141-803	0-3000	0.05	± 0.30	12.8	150	50	24	10
141-783-1	141-803-1	0-3000	0.05	± 0.30	13.2	200	50	24	10
141-783-3	141-803-3	0-3000	0.05	± 0.35	14.0	300	50	24	10
141-792	141-812	0-3000	0.02/. 001"	± 0.26	12.8	150	50	24	10
141-792-1	141-812-1	0-3000	0.02/. 001"	± 0.26	13.2	200	50	24	10
141-792-3	141-812-3	0-3000	0.02/. 001"	± 0.28	14.0	300	50	24	10
141-793	141-813	0-3000	0.05/1/128"	± 0.30	12.8	150	50	24	10
141-793-1	141-813-1	0-3000	0.05/1/128"	± 0.30	13.2	200	50	24	10
141-793-3	141-813-3	0-3000	0.05/1/128"	± 0.35	14.0	300	50	24	10
141-786	141-804	0-4000	0.02	± 0.34	16.1	200	50	24	10
141-786-1	141-804-1	0-4000	0.02	± 0.34	16.5	250	50	24	10
141-786-2	141-804-2	0-4000	0.02	± 0.34	16.9	300	50	24	10
141-787	141-805	0-4000	0.05	± 0.40	16.1	200	50	24	10
141-787-1	141-805-1	0-4000	0.05	± 0.40	16.5	250	50	24	10
141-787-2	141-805-2	0-4000	0.05	± 0.40	16.9	300	50	24	10
141-796	141-814	0-4000	0.02/. 001"	± 0.34	16.1	200	50	24	10
141-796-1	141-814-1	0-4000	0.02/. 001"	± 0.34	16.5	250	50	24	10
141-796-2	141-814-2	0-4000	0.02/. 001"	± 0.34	16.9	300	50	24	10
141-797	141-815	0-4000	0.05/1/128"	± 0.40	16.1	200	50	24	10
141-797-1	141-815-1	0-4000	0.05/1/128"	± 0.40	16.5	250	50	24	10
141-797-2	141-815-2	0-4000	0.05/1/128"	± 0.40	16.9	300	50	24	10

HAFFMAN
High Precision Tools

让测量更简单

C

带表卡尺类
DIAL CALIPERS

诚信为本·科技立业

SINCERITY & TECHNOLOGY

带表卡尺
Dial Caliper

GB/T | S/STL hardened

C

带微动滚轮
With fine-adjusted roller

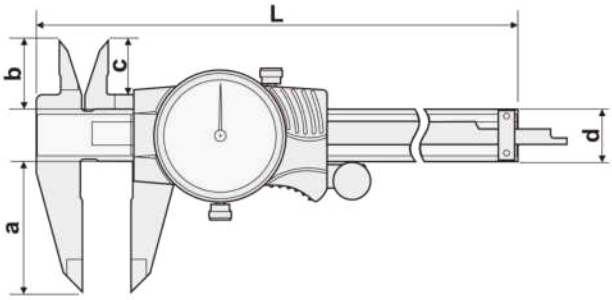

货 号 Code NO.	测量范围 Measuring Range mm	分度值 Graduation mm/inch	精 度 Accuracy mm	示值/周 Range/rev.	L mm	a mm	b mm	c mm	d mm
171-122A2G	0-150	0.01	±0.03	1	236	40	21	16.5	16
171-124A2G	0-200	0.01	±0.03	1	286	50	24	19.5	16
171-126A2G	0-300	0.01	±0.04	1	400	60	25	18.5	17
171-132A2G	0-150	0.02	±0.03	2	236	40	21	16.5	16
171-134A2G	0-200	0.02	±0.03	2	286	50	24	19.5	16
171-136A2G	0-300	0.02	±0.04	2	400	60	25	18.5	17

闭式
Mono Block

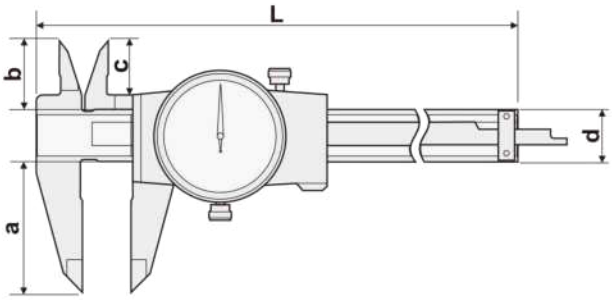

货 号 Code NO.	测量范围 Measuring Range mm	分度值 Graduation mm/inch	精 度 Accuracy mm	示值/周 Range/rev.	L mm	a mm	b mm	c mm	d mm
171-122A	0-150	0.01	±0.03	1	236	40	21	16.5	16
171-124A	0-200	0.01	±0.03	1	286	50	24	19.5	16
171-126A	0-300	0.01	±0.04	1	400	60	25	18.5	17
171-132A	0-150	0.02	±0.03	2	236	40	21	16.5	16
171-134A	0-200	0.02	±0.03	2	286	50	24	19.5	16
171-136A	0-300	0.02	±0.04	2	400	60	25	18.5	17

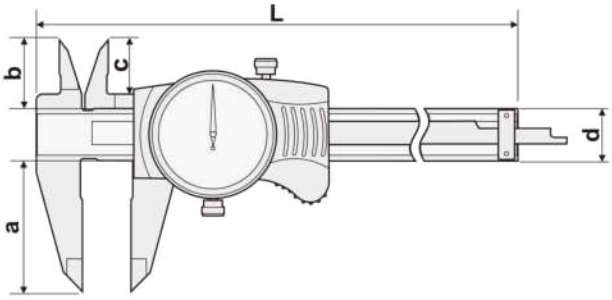

货 号 Code NO.	测量范围 Measuring Range mm	分度值 Graduation mm/inch	精 度 Accuracy mm	示值/周 Range/rev.	L mm	a mm	b mm	c mm	d mm
171-122A1	0-150	0.01	±0.03	1	236	40	21	16.5	16
171-124A1	0-200	0.01	±0.03	1	286	50	24	19.5	16
171-126A1	0-300	0.01	±0.04	1	400	60	25	18.5	17
171-132A1	0-150	0.02	±0.03	2	236	40	21	16.5	16
171-134A1	0-200	0.02	±0.03	2	286	50	24	19.5	16
171-136A1	0-300	0.02	±0.04	2	400	60	25	18.5	17

主要特点:

- 机芯防震，性能更加稳定
- 金属罩壳，低温环境不开裂
- 读数清晰、直观、精确
- 用于测量外径、内径、孔深和台阶尺寸

FEATURES

- Shockproof, stable performance
- Metal casing, no cracking in low temperature environment
- Clear, direct and accurate reading
- Used for OD, ID, depth and step measurements

合金带表卡尺
Dial Caliper with Carbide-tipped Jaws

GB/T | S/STL hardened

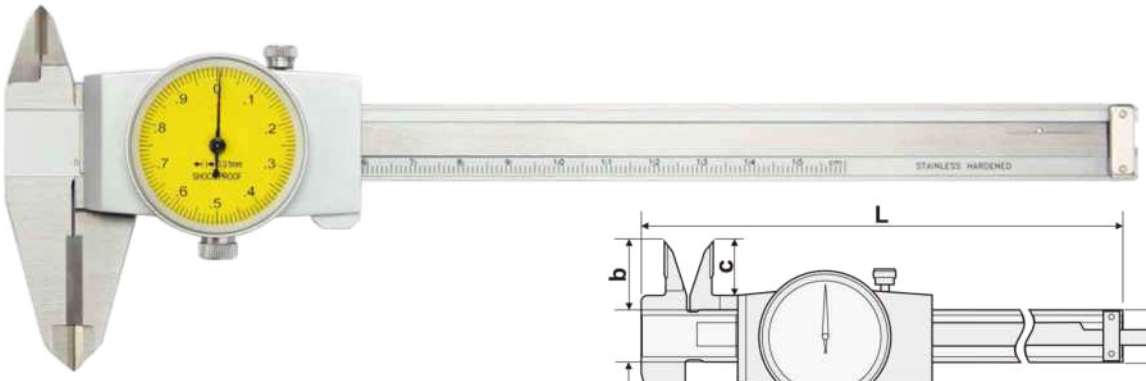

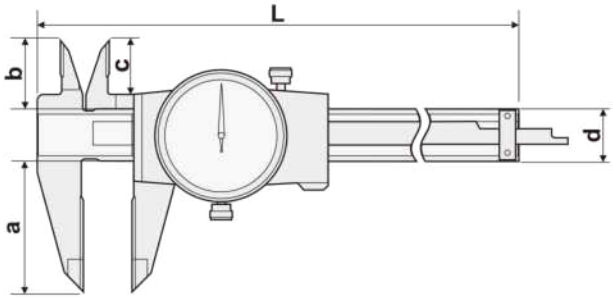

主要特点：
- 量爪镶耐磨硬质合金，使用寿命长
- 读数清晰、直观、精确
- 用于测量外径、内径、孔深和台阶尺寸

FEATURES
- With durable carbide tips
- Clear, direct and accurate reading
- Used for OD, ID, depth and step measurements

货 号 Code NO.	测量范围 Measuring Range mm	分度值 Graduation mm/inch	精 度 Accuracy mm	示值/周 Range/rev.	L mm	a mm	b mm	c mm	d mm
171-222A	0-150	0.01	±0.03	1	236	40	21	16.5	16
171-224A	0-200	0.01	±0.03	1	286	50	24	19.5	16
171-226A	0-300	0.01	±0.04	1	400	60	25	18.5	17
171-232A	0-150	0.02	±0.03	2	236	40	21	16.5	16
171-234A	0-200	0.02	±0.03	2	286	50	24	19.5	16
171-236A	0-300	0.02	±0.04	2	400	60	25	18.5	17

单向爪带表卡尺
Dial Caliper with Basic Jaws

GB/T | S/STL hardened

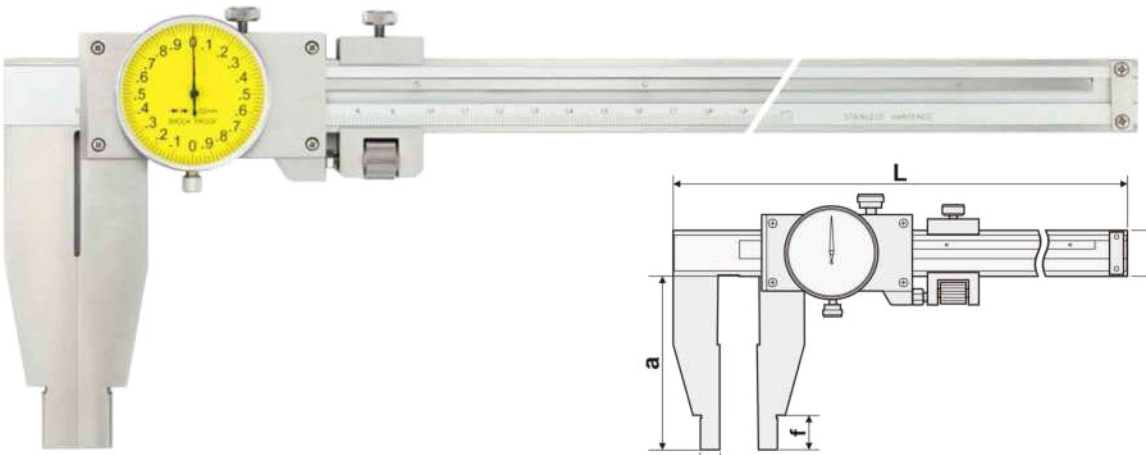

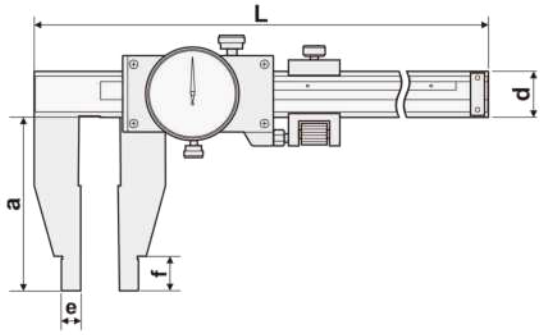

主要特点：
- 读数清晰、直观、精确
- 圆弧形内测量面更适合测量精密内孔或槽的尺寸

FEATURES
- Clear, direct and accurate reading
- Nib style jaws for accurate inner hole and inside groove measurement

货 号 Code NO.	测量范围 Measuring Range mm	分度值 Graduation mm/inch	精 度 Accuracy mm	示值/周 Range/rev.	重 量 Weight kg	L mm	a mm	d mm	e mm	f mm
171-148	0-500	0.02	±0.05	2	0.9	650	90	21	10	18
171-148A	10-500	0.02	±0.05	2	0.9	650	90	21	5	18
171-148-1	0-600	0.02	±0.05	2	1.0	750	90	21	10	18
171-148A-1	10-600	0.02	±0.05	2	1.0	750	90	21	5	18
171-154	0-1000	0.02	±0.07	2	2.3	1190	150	28	10	24
171-158	0-1500	0.02	±0.11	2	4.2	1690	150	28	10	24

HAFFMAN
High Precision Tools

让测量更简单

D

深度卡尺类
DEPTH GAUGES

诚信为本·科技立业

SINCERITY & TECHNOLOGY

蓝牙数显深度尺
Bluetooth Digital Depth Gauge

GB/T | S/STL hardened

NEW

自动断电
Auto power-off

分辨力:0.01mm
Resolution:0.01mm

D

主要特点:

- 用于精确测量孔深和台阶高度
- 内置蓝牙，可把测量数据传输到手机、平板和电脑
- 两种工作模式: 简易连接软件模式和HID配对键盘模式
- 具备OTA无线升级功能，功能定制升级，无需返厂
- 开阔地传输距离≤10米　工业环境传输距离≤7米

FEATURES

- Used for depth and step measurements
- Built-in Bluetooth, measurement data can be transmitted to mobile phones, tablets and computers
- Two working modes: simple connection software mode and HID paired keyboard mode
- With OTA wireless upgrade function, function customization and upgrade, no need to return to the factory
- Transmission distance ≤ 10 m(open land); ≤7 m(industrial environment)

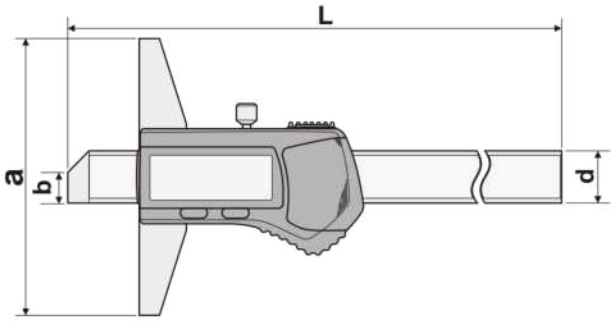

货 号 Code NO.	测量范围 Measuring Range mm	精度 Accuracy mm	L mm	a mm	b mm	d mm
121-201BT	0-150	±0.03	235	100	6	14.5
121-202BT	0-200	±0.03	285	100	6	14.5
121-204BT	0-300	±0.04	385	100	6	14.5

无线数据连接示意图
Wireless data connection diagram

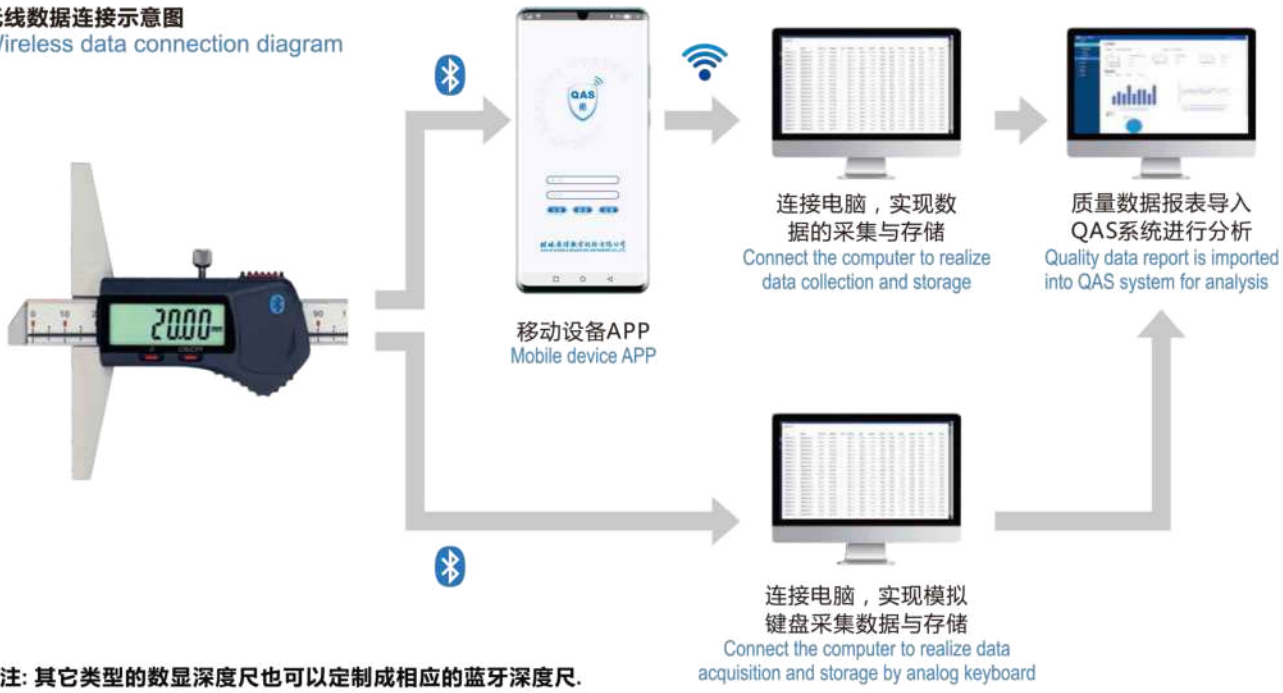

注: 其它类型的数显深度尺也可以定制成相应的蓝牙深度尺.

单钩头数显深度尺

Digital Depth Gauge with Single Hook

GB/T | S/STL hardened | SPC 数据接口

货 号 Code NO.	测量范围 Measuring Range mm	精度 Accuracy mm	L mm	a mm	b mm	c mm	d mm
123-201	0-150	±0.03	235	100	5	2	14.5
123-201-1	0-150	±0.03	235	150	5	2	14.5
123-202	0-200	±0.03	285	100	5	2	14.5
123-202-1	0-200	±0.03	285	150	5	2	14.5
123-204	0-300	±0.04	385	100	5	2	14.5
123-204-1	0-300	±0.04	385	150	5	2	14.5

自动断电
Auto power-off

分辨力:0.01mm
Resolution:0.01mm

主要特点:

- 用于精确测量沟槽宽和沟槽位置尺寸
- 任意位置清零，便于相对测量与绝对测量转换
- 任意位置公制与英制转换

FEATURES

- Used for grooves, depth and width measurements
- Zero-setting at any position, convenient for relative and absolute measure conversion
- Mm/inch conversion at any position

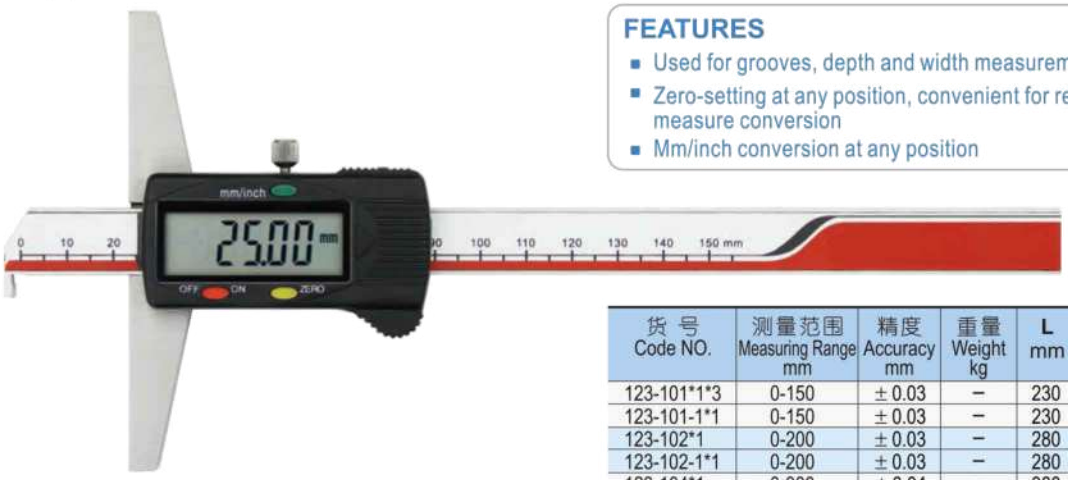

货 号 Code NO.	测量范围 Measuring Range mm	精度 Accuracy mm	重量 Weight kg	L mm	a mm	b mm	c mm	d mm
123-101*1*3	0-150	±0.03	–	230	100	3	1	14.5
123-101-1*1	0-150	±0.03	–	230	150	3	1	14.5
123-102*1	0-200	±0.03	–	280	100	3	1	14.5
123-102-1*1	0-200	±0.03	–	280	150	3	1	14.5
123-104*1	0-300	±0.04	–	380	100	3	1	14.5
123-104-1*1	0-300	±0.04	–	380	150	3	1	14.5
123-105	0-500	±0.05	0.4	585	120	8	3	15
123-105-1	0-500	±0.05	0.4	585	150	8	3	15
123-105-2	0-500	±0.05	0.5	585	200	8	3	15
123-106	0-600	±0.05	0.5	685	120	8	3	15
123-106-1	0-600	±0.05	0.5	685	150	8	3	15
123-106-2	0-600	±0.05	0.6	685	200	8	3	15
123-107	0-800	±0.06	1.5	988	150	10	4	18
123-107-1	0-800	±0.06	1.6	988	200	10	4	18
123-107-2	0-800	±0.06	1.7	988	250	10	4	18
123-108	0-1000	±0.07	1.7	1188	150	10	4	18
123-108-1	0-1000	±0.07	1.8	1188	200	10	4	18
123-108-2	0-1000	±0.07	1.9	1188	250	10	4	18

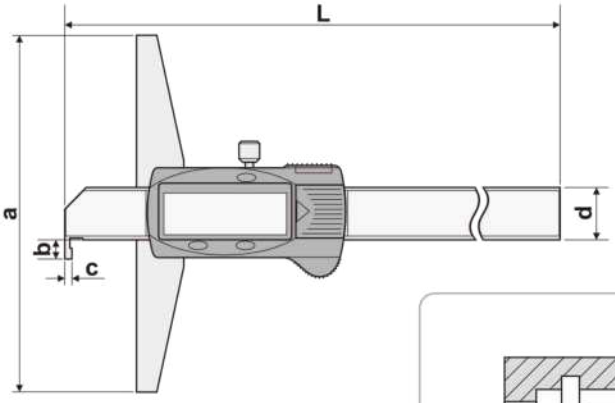

测量示意图

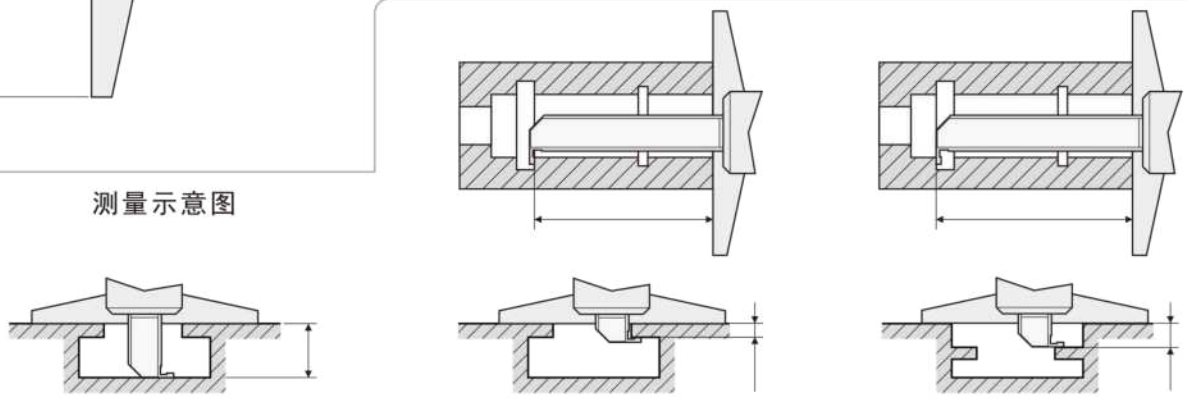

双钩头数显深度尺
Digital Depth Gauge with Double Hooks

GB/T | S/STL hardened | SPC 数据接口

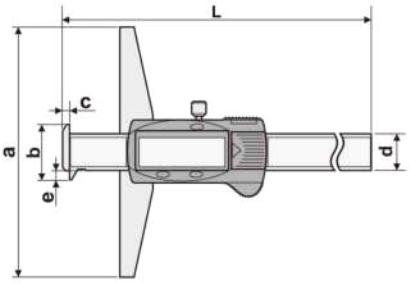

自动断电
Auto power-off

分辨力:0.01mm
Resolution:0.01mm

货 号 Code NO.	测量范围 Measuring Range mm	精度 Accuracy mm	重量 Weight kg	L mm	a mm	b mm	c mm	d mm	e mm
123-131	0-150	±0.03	–	237.5	100	21.5	2.5	14.5	3.5
123-131-1	0-150	±0.03	–	237.5	150	21.5	2.5	14.5	3.5
123-132	0-200	±0.03	–	287.5	100	21.5	2.5	14.5	3.5
123-132-1	0-200	±0.03	–	287.5	150	21.5	2.5	14.5	3.5
123-133	0-300	±0.04	–	387.5	100	21.5	2.5	14.5	3.5
123-133-1	0-300	±0.04	–	387.5	150	21.5	2.5	14.5	3.5
123-135	0-500	±0.05	0.4	588	120	25	3	15	4
123-135-1	0-500	±0.05	0.4	588	150	25	3	15	4
123-135-2	0-500	±0.05	0.5	588	200	25	3	15	4
123-136	0-600	±0.05	0.5	688	120	25	3	15	4
123-136-1	0-600	±0.05	0.5	688	150	25	3	15	4
123-136-2	0-600	±0.05	0.6	688	200	25	3	15	4
123-137	0-800	±0.06	1.5	992	150	32	4	18	7
123-137-1	0-800	±0.06	1.6	992	200	32	4	18	7
123-137-2	0-800	±0.06	1.7	992	250	32	4	18	7
123-138	0-1000	±0.07	1.7	1192	150	32	4	18	7
123-138-1	0-1000	±0.07	1.8	1192	200	32	4	18	7
123-138-2	0-1000	±0.07	1.9	1192	250	32	4	18	7

主要特点:
- 用于精确测量孔深和台阶高度
- 任意位置清零，便于相对测量与绝对测量转换
- 任意位置公制与英制转换

FEATURES
- Used for depth and step measurements
- Zero-setting at any position, convenient for relative and absolute measure conversion
- Mm/inch conversion at any position

数显深度尺
Digital Depth Gauge

GB/T | S/STL hardened | SPC 数据接口

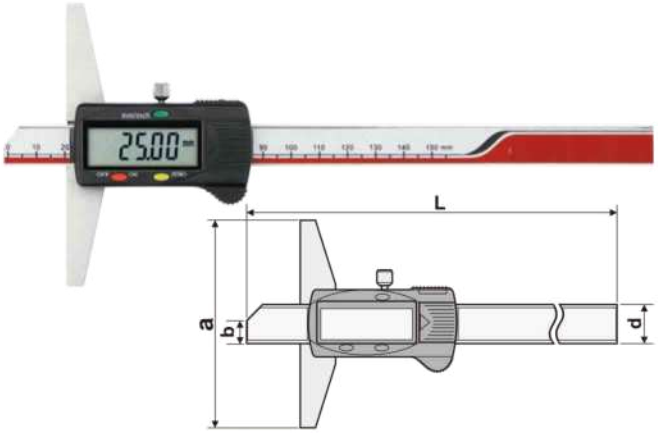

自动断电
Auto power-off

分辨力:0.01mm
Resolution:0.01mm

主要特点:
- 用于精确测量孔深和台阶高度
- 任意位置清零，便于相对测量与绝对测量转换
- 任意位置公制与英制转换

FEATURES
- Used for depth and step measurements
- Zero-setting at any position, convenient for relative and absolute measure conversion
- Mm/inch conversion at any position

货 号 Code NO.	测量范围 Measuring Range mm	精度 Accuracy mm	L mm	a mm	b mm	d mm
121-201	0-150	±0.03	235	100	6	14.5
121-201-1	0-150	±0.03	235	150	6	14.5
121-202	0-200	±0.03	285	100	6	14.5
121-202-1	0-200	±0.03	285	150	6	14.5
121-203	0-250	±0.03	335	100	6	14.5
121-203-1	0-250	±0.03	335	150	6	14.5
121-204	0-300	±0.04	385	100	6	14.5
121-204-1	0-300	±0.04	385	150	6	14.5

货 号 Code NO.	测量范围 Measuring Range mm	精度 Accuracy mm	重量 Weight kg	L mm	a mm	b mm	d mm
121-105	0-500	±0.05	0.4	585	120	7	15
121-105-1	0-500	±0.05	0.4	585	150	7	15
121-105-2	0-500	±0.05	0.5	585	200	7	15
121-106	0-600	±0.05	0.5	685	120	7	15
121-106-1	0-600	±0.05	0.5	685	150	7	15
121-106-2	0-600	±0.05	0.6	685	200	7	15
121-107	0-800	±0.06	1.5	988	150	7	18
121-107-1	0-800	±0.06	1.6	988	200	7	18
121-107-2	0-800	±0.06	1.7	988	250	7	18
121-108	0-1000	±0.07	1.7	1188	150	7	18
121-108-1	0-1000	±0.07	1.8	1188	200	7	18
121-108-2	0-1000	±0.07	1.9	1188	250	7	18
121-108-3	0-1000	±0.07	2.0	1188	300	7	18

针测头数显深度尺
Needle Digital Depth Gauge

GB/T | S/STL hardened | SPC 数据输出

自动断电
Auto power-off
分辨力:0.01mm
Resolution:0.01mm

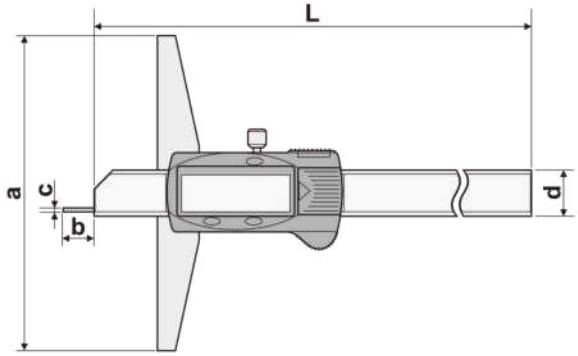

D

主要特点:
- 用于精确测量小孔底部深度和台阶高度
- 任意位置清零，便于相对测量与绝对测量转换
- 任意位置公制与英制转换

FEATURES
- Used for measuring depth of small hole and step
- Zero-setting at any position, convenient for relative and absolute measure conversion
- Mm/inch conversion at any position

货 号 Code NO.	测量范围 Measuring Range mm	精度 Accuracy mm	L mm	a mm	b mm	c mm	d mm
127-101	0-150	±0.03	230	100	6	Ø1.5	14.5
127-102	0-200	±0.03	280	100	6	Ø1.5	14.5
127-103	0-300	±0.04	380	100	6	Ø1.5	14.5

轮胎花纹数显深度尺
Thread Digital Depth Gauge

GB/T | S/STL hardened

自动断电
Auto power-off
分辨力:0.01mm
Resolution:0.01mm

主要特点:
- 专用于测量各种车轮外胎防滑花纹深度，以便及时了解轮胎磨损情况
- 外形小巧，便于司机随身携带
- 任意位置清零，便于相对测量与绝对测量转换
- 任意位置公制与英制转换

FEATURES
- Used for measuring the tire thread depth
- Easy to carry
- Zero-setting at any position, convenient for relative and absolute measure conversion
- Mm/inch conversion at any position

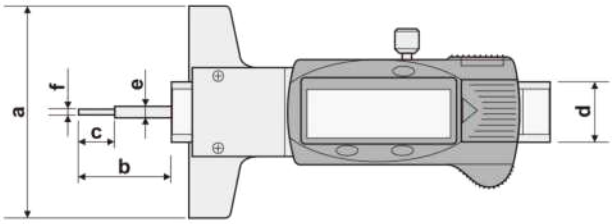

货 号 Code NO.	测量范围 Measuring Range mm	精度 Accuracy mm	a mm	b mm	c mm	d mm	e mm	f mm
125-101	0-25	±0.02	60	26	10	16	Ø3	Ø1.5

数显阶梯深度尺
Digital Depth Gauge with Adjustable Extension Base

S/STL hardened | SPC 数据接口

主要特点:

- 用于精确测量沟槽宽和沟槽位置尺寸、台阶深度
- 深度尺可以在加宽基面上移动，测量更方便
- 多种规格的加宽基面可供选择
- 任意位置清零，便于相对测量与绝对测量转换
- 带数据保持功能
- 带预置功能
- 带公差带设置功能
- 任意位置公制与英制转换

FEATURES

- Used for grooves depth and width measurements
- The depth gage can move on the adjustable base, more convenient for measurement.
- Optional adjustable extension bases
- Zero-setting at any position, convenient for relative and absolute measure conversion
- Data hold
- With preset funtion
- Tolerances setting
- Mm/inch conversion at any position

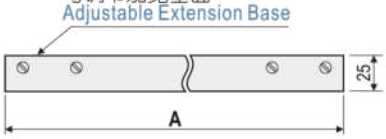

可调节加宽基面
Adjustable Extension Base

货 号 Code NO.	A mm
721-501	300
721-502	400
721-503	500
721-504	600
721-505	800

自动断电
Auto power-off

分辨力:0.01mm
Resolution:0.01mm

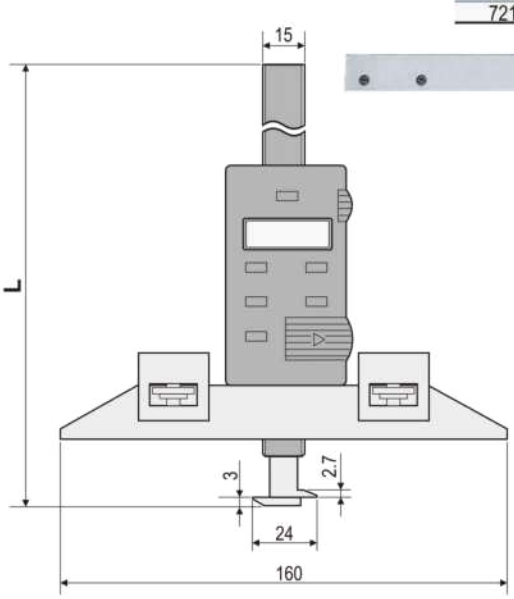

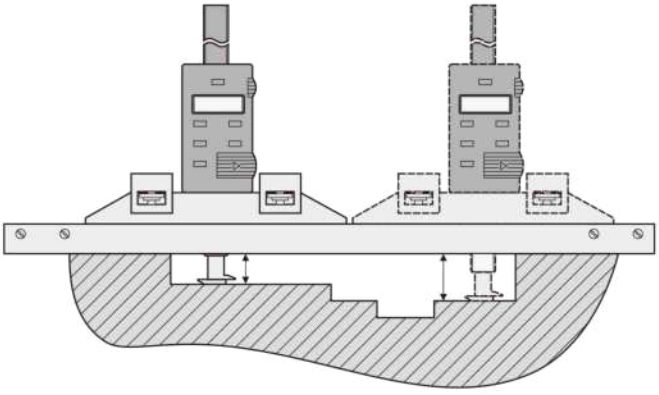

货 号 Code NO.	测量范围 Measuring Range mm	精度 Accuracy mm	L mm
124-103	0-300	±0.04	476
124-104	0-400	±0.04	576
124-105	0-500	±0.05	676
124-106	0-600	±0.05	776

D

数显键槽深度尺
Digital Depth Gauge for Keyway

S/STL hardened

分辨力:0.01mm
Resolution:0.01mm

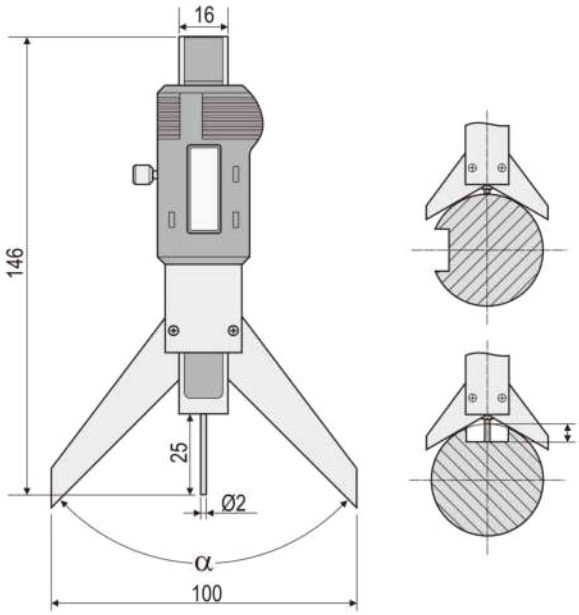

D

主要特点:
- 专用于测量各种轴上键槽深度，方便快捷
- 外形小巧，便于携带
- 任意位置清零，便于相对测量与绝对测量转换
- 任意位置公制与英制转换

FEATURES
- Special for keyway depth measurements
- Easy to carry
- Zero-setting at any position, convenient for relative and absolute measure conversion
- Mm/inch conversion at any position

货 号 Code NO.	测量范围 Measuring Range mm	精度 Accuracy mm	轴径 Diameter of Axle mm	α
126-104	0-50	±0.03	Ø5-Ø140	90°
126-105	0-50	±0.03	Ø5-Ø200	120°

深小孔数显深度尺
Digital Depth Gauge with Slender Rod

S/STL hardened

分辨力:0.01mm
Resolution:0.01mm

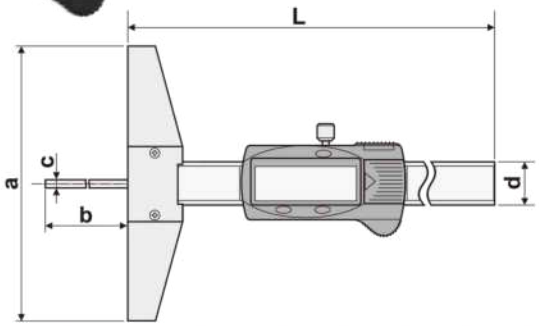

主要特点:
- 带电源开关
- 任意位置清零
- 测量单位转换
- 带数据输出
- 可用于细长小孔的深度精密测量
- 测杆直径达到Φ3mm, 刚性好

FEATURES
- Power on/off
- Zero-setting at any position
- Units conversion
- Data output
- Depth measurement of slender bores
- Measuring head: Ø3mm

货 号 Code NO.	测量范围 Measuring Range mm	精度 Accuracy mm	L mm	a mm	b mm	c mm	d mm
121-700	0-100	±0.04	195	100	105	Ø3	16
121-700-1	0-100	±0.04	195	150	105	Ø3	16
121-701	0-150	±0.04	245	100	155	Ø3	16
121-701-1	0-150	±0.04	245	150	155	Ø3	16
121-702	0-200	±0.05	295	100	205	Ø3	16
121-702-1	0-200	±0.05	295	150	205	Ø3	16

带表深度尺
Dial Depth Gauge

GB/T S/STL hardened

主要特点：
- 用于精确测量孔深和台阶高度
- 读数清晰、直观、精确

FEATURES
- Used for depth and step measurements
- Clear, direct and accurate reading

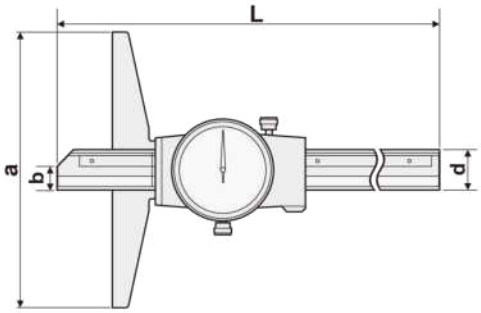

货 号 Code NO.	测量范围 Measuring Range mm	分度值 Graduation mm/inch	精 度 Accuracy mm	示值/周 Range/rev.	L mm	a mm	b mm	d mm
181-132A	0-150	0.02	±0.03	1	236	100	4.6	13.5
181-132-1A	0-150	0.02	±0.03	1	236	150	4.6	13.5
181-134A	0-200	0.02	±0.03	1	286	100	4.6	13.5
181-134-1A	0-200	0.02	±0.03	2	286	150	4.6	13.5
181-136A	0-300	0.02	±0.04	2	380	100	4.6	14
181-136-2A	0-300	0.02	±0.04	2	380	150	4.6	14
181-138A	0-500	0.02	±0.05	2	585	150	6	16
181-138A-1	0-500	0.02	±0.05	2	585	200	6	16

D

单钩头带表深度尺
Dial Depth Gauge with Single Hook

GB/T S/STL hardened

主要特点：
- 用于精确测量沟槽宽和沟槽位置尺寸
- 读数清晰、直观、精确

FEATURES
- Used for depth and step measurements
- Clear, direct and accurate reading

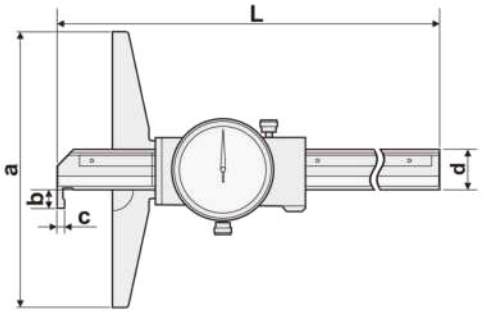

货 号 Code NO.	测量范围 Measuring Range mm	分度值 Graduation mm/inch	精 度 Accuracy mm	示值/周 Range/rev.	L mm	a mm	b mm	c mm	d mm
183-122A	0-150	0.01	±0.03	1	236	100	5	2	13.5
183-132A	0-150	0.02	±0.03	1	236	100	5	2	13.5
183-122-1A	0-150	0.01	±0.03	1	236	150	5	2	13.5
183-132-1A	0-150	0.02	±0.03	1	236	150	5	2	13.5
183-124A	0-200	0.01	±0.03	1	286	100	5	2	13.5
183-134A	0-200	0.02	±0.03	2	286	100	5	2	13.5
183-124-1A	0-200	0.01	±0.03	2	286	150	5	2	13.5
183-134-1A	0-200	0.02	±0.03	2	286	150	5	2	13.5
183-126A	0-300	0.01	±0.04	2	405	100	5	2	14
183-136A	0-300	0.02	±0.04	2	405	100	5	2	14
183-126-1A	0-300	0.01	±0.04	2	405	150	5	2	14
183-136-1A	0-300	0.02	±0.04	2	405	150	5	2	14

单钩头游标深度尺
Vernier Depth Gauge with Single Hook

GB/T | S/STL hardened

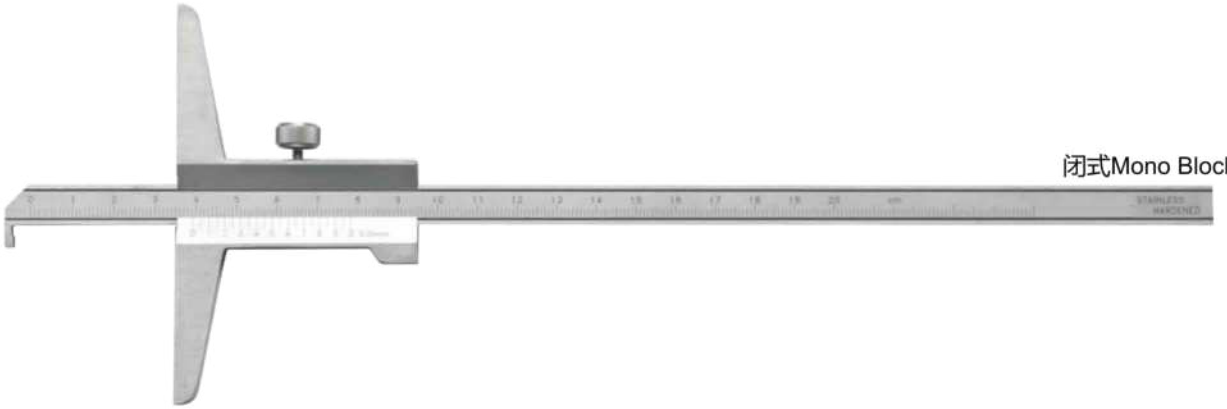

闭式Mono Block

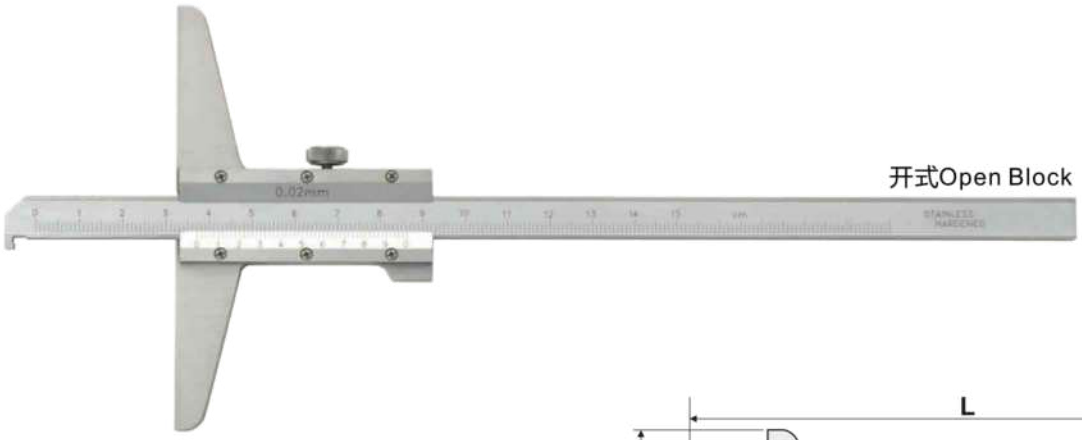

开式Open Block

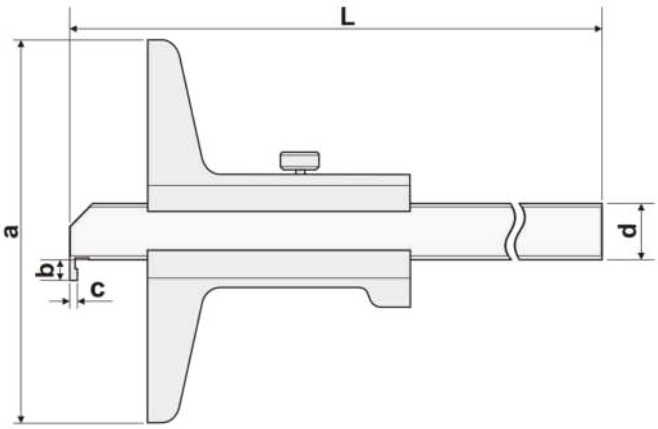

主要特点:
- 用于精确测量沟槽宽和沟槽位置尺寸
- 尺框有闭式和开式两种结构可选

FEATURES
- Used for depth and step measurements
- Mono and open blocks for option

货号Code NO. 闭式Mono Block	货号Code NO. 开式Open Block	测量范围 Measuring Range mm	分度值 Graduation mm	精度 Accuracy mm	L mm	a mm	b mm	c mm	d mm
155-100	155-100K	0-150	0.02	±0.03	250	100	2.5	2	10
155-100-1	155-100-1K	0-150	0.02	±0.03	250	150	2.5	2	10
155-101	155-101K	0-150	0.05	±0.05	250	100	2.5	2	10
155-101-1	155-101-1K	0-150	0.05	±0.05	250	150	2.5	2	10
155-102	155-102K	0-200	0.02	±0.03	300	100	2.5	2	10
155-102-1	155-102-1K	0-200	0.02	±0.03	300	150	2.5	2	10
155-103	155-103K	0-200	0.05	±0.05	300	100	2.5	2	10
155-103-1	155-103-1K	0-200	0.05	±0.05	300	150	2.5	2	10
155-104	155-104K	0-250	0.02	±0.04	350	100	2.5	2	10
155-104-1	155-104-1K	0-250	0.02	±0.04	350	150	2.5	2	10
155-105	155-105K	0-250	0.05	±0.08	350	100	2.5	2	10
155-105-1	155-105-1K	0-250	0.05	±0.08	350	150	2.5	2	10
155-106	155-106K	0-300	0.02	±0.04	400	100	2.5	2	10
155-106-1	155-106-1K	0-300	0.02	±0.04	400	150	2.5	2	10

货号Code NO. 闭式Mono Block	货号Code NO. 开式Open Block	测量范围 Measuring Range mm	分度值 Graduation mm	精度 Accuracy mm	L mm	a mm	b mm	c mm	d mm
155-107	151-107K	0-300	0.05	±0.08	400	100	2.5	2	10
155-107-1	151-107-1K	0-300	0.05	±0.08	400	150	2.5	2	10
155-108	151-108K	0-400	0.02	±0.05	505	150	10	5	11
155-108-1	151-108-1K	0-400	0.02	±0.05	505	200	10	5	11
155-108-2	151-108-2K	0-400	0.02	±0.05	505	250	10	5	11
155-109	151-109K	0-400	0.05	±0.08	505	150	10	5	11
155-109-1	151-109-1K	0-400	0.05	±0.08	505	200	10	5	11
155-109-2	151-109-2K	0-400	0.05	±0.08	505	250	10	5	11
155-110	151-110K	0-500	0.02	±0.05	605	150	10	5	11
155-110-1	151-110-1K	0-500	0.02	±0.05	605	200	10	5	11
155-110-2	151-110-2K	0-500	0.02	±0.05	605	250	10	5	11
155-111	151-111K	0-500	0.05	±0.08	605	150	10	5	11
155-111-1	151-111-1K	0-500	0.05	±0.08	605	200	10	5	11
155-111-2	151-111-2K	0-500	0.05	±0.08	605	250	10	5	11

带微调游标深度尺
Vernier Depth Gauge with Fine Adjustment Clamp

GB/T | S/STL hardened

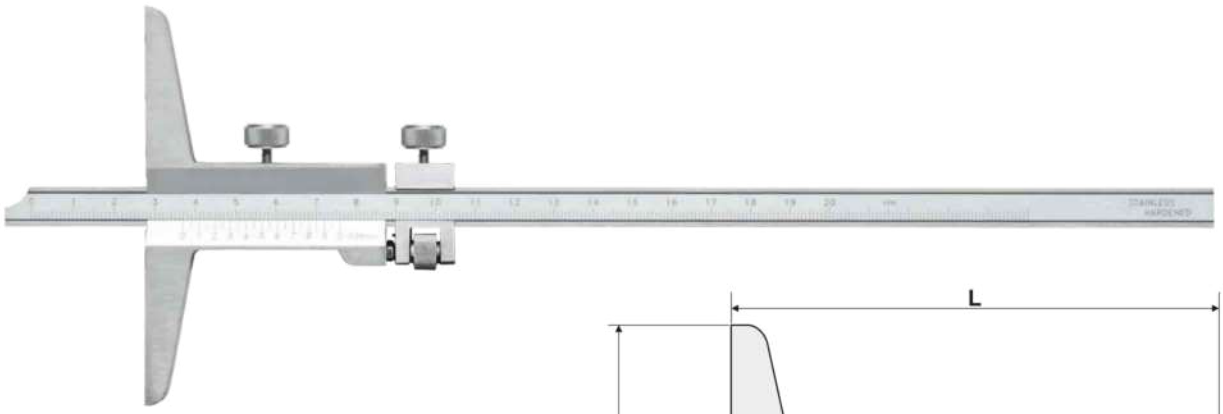

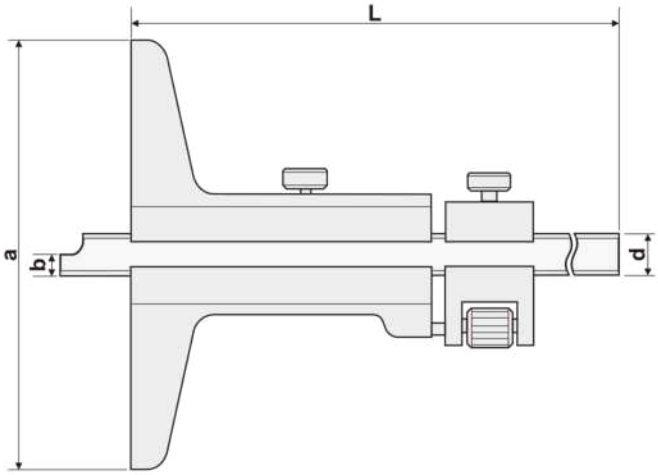

D

主要特点:
- 用于测量孔深和台阶尺寸

FEATURES
- Used for measuring depth of a bore and step

货 号 Code NO.	测量范围 Measuring Range mm	分度值 Graduation mm	精度 Accuracy mm	L mm	a mm	b mm	d mm
151-300	0-150	0.02	±0.03	250	100	5	10
151-300-1	0-150	0.02	±0.03	250	150	5	10
151-301	0-150	0.05	±0.05	250	100	5	10
151-301-1	0-150	0.05	±0.05	250	150	5	10
151-302	0-200	0.02	±0.03	300	100	5	10
151-302-1	0-200	0.02	±0.03	300	150	5	10
151-303	0-200	0.05	±0.05	300	100	5	10
151-303-1	0-200	0.05	±0.05	300	150	5	10
151-304	0-250	0.02	±0.04	350	100	5	10
151-304-1	0-250	0.02	±0.04	350	150	5	10
151-304-2	0-250	0.02	±0.04	350	200	5	10
151-305	0-250	0.05	±0.08	350	100	5	10
151-305-1	0-250	0.05	±0.08	350	150	5	10
151-305-2	0-250	0.05	±0.08	350	200	5	10
151-306	0-300	0.02	±0.04	400	100	5	10
151-306-1	0-300	0.02	±0.04	400	150	5	10
151-306-2	0-300	0.02	±0.04	400	200	5	10
151-307	0-300	0.05	±0.08	400	100	5	10
151-307-1	0-300	0.05	±0.08	400	150	5	10
151-307-2	0-300	0.05	±0.08	400	200	5	10
151-308	0-400	0.02	±0.05	505	150	4	11
151-308-1	0-400	0.02	±0.05	505	200	4	11
151-308-2	0-400	0.02	±0.05	505	250	4	11
151-309	0-400	0.05	±0.08	505	150	4	11
151-309-1	0-400	0.05	±0.08	505	200	4	11

货 号 Code NO.	测量范围 Measuring Range mm	分度值 Graduation mm	精度 Accuracy mm	重量 Weight kg	L mm	a mm	b mm	d mm
151-309-2	0-400	0.05	±0.08	–	505	250	4	11
151-310	0-500	0.02	±0.05	0.4	605	150	4	11
151-310-1	0-500	0.02	±0.08	0.5	605	200	4	11
151-310-2	0-500	0.02	±0.08	0.5	605	250	4	11
151-311	0-500	0.05	±0.08	0.4	605	150	4	11
151-311-1	0-500	0.05	±0.07	0.5	605	200	4	11
151-311-2	0-500	0.05	±0.07	0.5	605	250	4	11
151-312	0-600	0.02	±0.07	0.5	705	150	4	11
151-312-1	0-600	0.02	±0.10	0.6	705	200	4	11
151-312-2	0-600	0.02	±0.10	0.6	705	250	4	11
151-313	0-600	0.05	±0.10	0.5	705	150	4	11
151-313-1	0-600	0.05	±0.07	0.6	705	200	4	11
151-313-2	0-600	0.05	±0.07	0.6	705	250	4	11
151-314	0-800	0.02	±0.07	1.5	968	200	6	18
151-314-1	0-800	0.02	±0.10	1.5	968	250	6	18
151-314-2	0-800	0.02	±0.10	1.6	968	300	6	18
151-315	0-800	0.05	±0.10	1.5	968	200	6	18
151-315-1	0-800	0.05	±0.07	1.5	968	250	6	18
151-315-2	0-800	0.05	±0.07	1.6	968	300	6	18
151-316	0-1000	0.02	±0.07	1.7	1168	200	6	18
151-316-1	0-1000	0.02	±0.10	1.8	1168	250	6	18
151-316-2	0-1000	0.02	±0.10	1.8	1168	300	6	18
151-317	0-1000	0.05	±0.10	1.7	1168	200	6	18
151-317-1	0-1000	0.05	±0.10	1.8	1168	250	6	18
151-317-2	0-1000	0.05	±0.10	1.8	1168	300	6	18

游标深度尺
Vernier Depth Gauge

GB/T | S/STL hardened

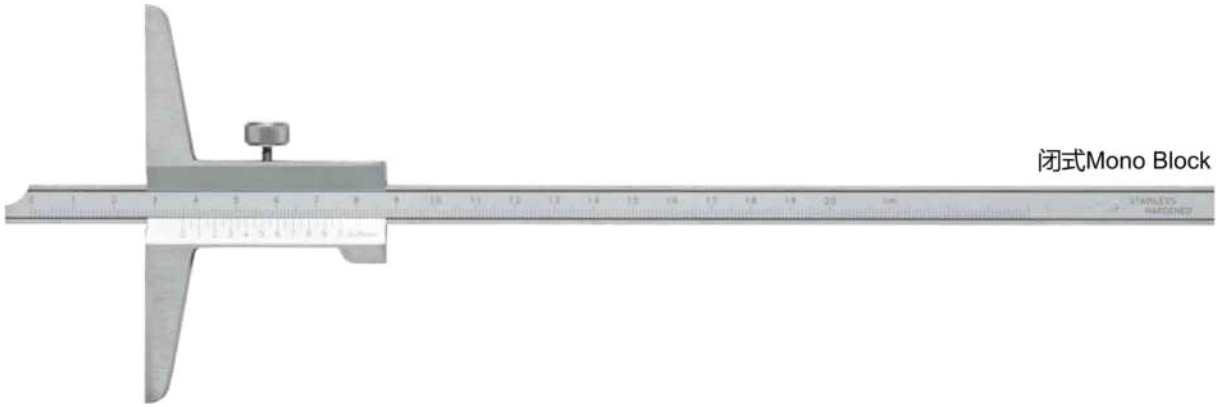

闭式Mono Block

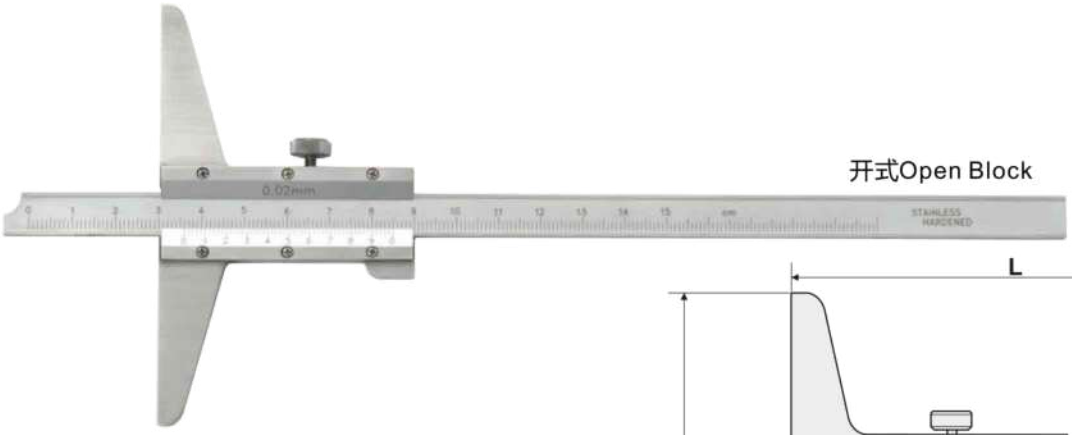

开式Open Block

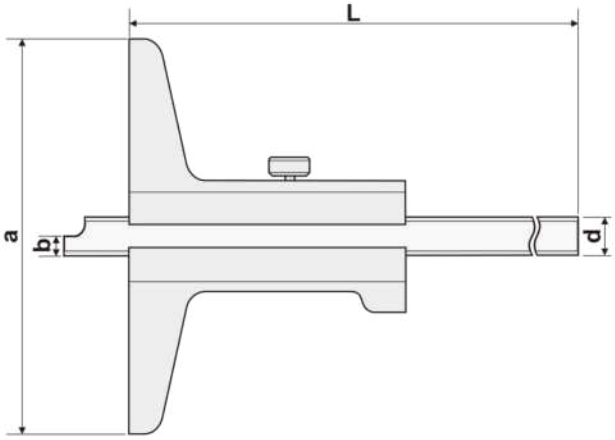

主要特点:
- 用于测量孔深和台阶尺寸

FEATURES
- Used for measuring depth of a bore and step

货号Code NO. 闭式Mono Block	货号Code NO. 开式Open Block	测量范围 Measuring Range mm	分度值 Graduation mm	精度 Accuracy mm	L mm	a mm	b mm	d mm
151-100	151-100K	0-150	0.02	±0.03	250	100	5	10
151-100-1	151-100-1K	0-150	0.02	±0.03	250	150	5	10
151-101	151-101K	0-150	0.05	±0.05	250	100	5	10
151-101-1	151-101-1K	0-150	0.05	±0.05	250	150	5	10
151-102	151-102K	0-200	0.02	±0.03	300	100	5	10
151-102-1	151-102-1K	0-200	0.02	±0.03	300	150	5	10
151-103	151-103K	0-200	0.05	±0.05	300	100	5	10
151-103-1	151-103-1K	0-200	0.05	±0.05	300	150	5	10
151-104	151-104K	0-250	0.02	±0.04	350	100	5	10
151-104-1	151-104-1K	0-250	0.02	±0.04	350	150	5	10
151-105	151-105K	0-250	0.05	±0.08	350	100	5	10
151-105-1	151-105-1K	0-250	0.05	±0.08	350	150	5	10
151-106	151-106K	0-300	0.02	±0.04	400	100	5	10
151-106-1	151-106-1K	0-300	0.02	±0.04	400	150	5	10
151-107	151-107K	0-300	0.05	±0.08	400	100	5	10
151-107-1	151-107-1K	0-300	0.05	±0.08	400	150	5	10
151-108	151-108K	0-400	0.02	±0.05	505	150	4	11
151-108-1	151-108-1K	0-400	0.02	±0.05	505	200	4	11
151-108-2	151-108-2K	0-400	0.02	±0.05	505	250	4	11
151-109	151-109K	0-400	0.05	±0.08	505	150	4	11
151-109-1	151-109-1K	0-400	0.05	±0.08	505	200	4	11
151-109-2	151-109-2K	0-400	0.05	±0.08	505	250	4	11
151-110	151-110K	0-500	0.02	±0.05	605	150	4	11

货号Code NO. 闭式Mono Block	货号Code NO. 开式Open Block	测量范围 Measuring Range mm	分度值 Graduation mm	精度 Accuracy mm	重量 Weight kg	L mm	a mm	b mm	d mm
151-110-1	151-110-1K	0-500	0.02	±0.05	0.5	605	200	4	11
151-110-2	151-110-2K	0-500	0.02	±0.05	0.5	605	250	4	11
151-111	151-111K	0-500	0.05	±0.08	0.4	605	150	4	11
151-111-1	151-111-1K	0-500	0.05	±0.08	0.5	605	200	4	11
151-111-2	151-111-2K	0-500	0.05	±0.08	0.5	605	250	4	11
151-112	151-112K	0-600	0.02	±0.07	0.5	705	150	4	11
151-112-1	151-112-1K	0-600	0.02	±0.07	0.6	705	200	4	11
151-112-2	151-112-2K	0-600	0.02	±0.07	0.6	705	250	4	11
151-113	151-113K	0-600	0.05	±0.10	0.5	705	150	4	11
151-113-1	151-113-1K	0-600	0.05	±0.10	0.6	705	200	4	11
151-113-2	151-113-2K	0-600	0.05	±0.10	0.6	705	250	4	11
151-114	151-114K	0-800	0.02	±0.07	1.5	960	150	7	18
151-114-1	151-114-1K	0-800	0.02	±0.07	1.5	960	200	7	18
151-114-2	151-114-2K	0-800	0.02	±0.07	1.6	960	250	7	18
151-115	151-115K	0-800	0.05	±0.10	1.5	960	150	7	18
151-115-1	151-115-1K	0-800	0.05	±0.10	1.5	960	200	7	18
151-115-2	151-115-2K	0-800	0.05	±0.10	1.6	960	250	7	18
151-116	151-116K	0-1000	0.02	±0.07	1.7	1160	150	7	18
151-116-1	151-116-1K	0-1000	0.02	±0.07	1.8	1160	200	7	18
151-116-2	151-116-2K	0-1000	0.02	±0.07	1.8	1160	250	7	18
151-117	151-117K	0-1000	0.05	±0.10	1.7	1160	150	7	18
151-117-1	151-117-1K	0-1000	0.05	±0.10	1.8	1160	200	7	18
151-117-2	151-117-2K	0-1000	0.05	±0.10	1.8	1160	250	7	18

带针游标深度尺
Needle Vernier Depth Gauge

S/STL hardened

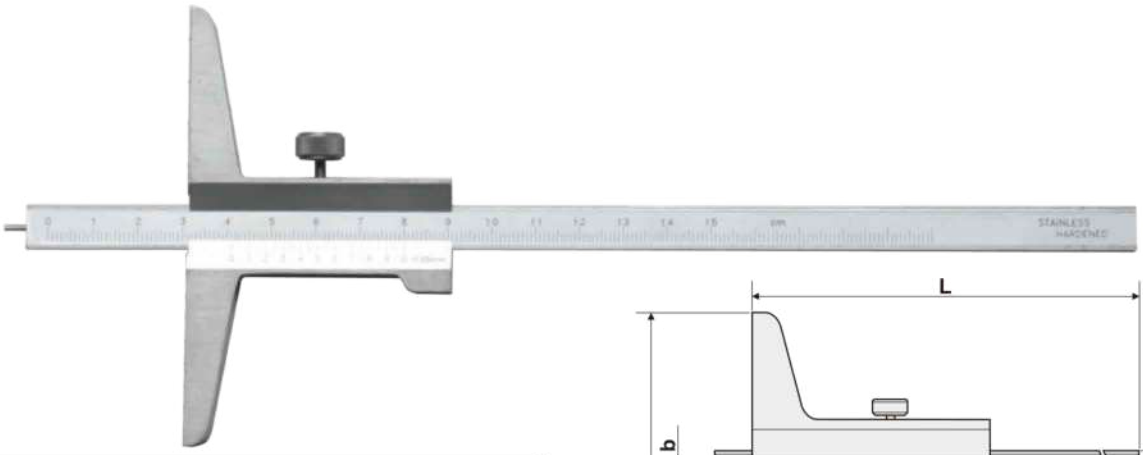

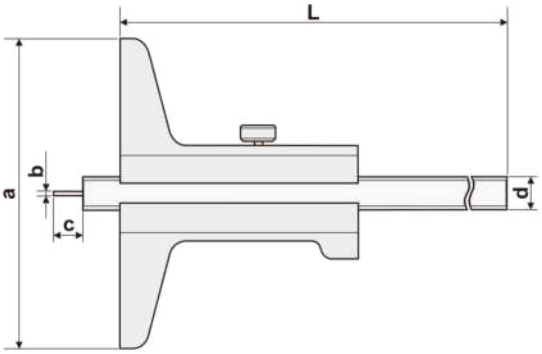

主要特点:
- 用于精确测量小孔底部深度和台阶高度

FEATURES
- Used for measuring depth of small hole and step

货 号 Code NO.	测量范围 Measuring Range mm	分度值 Graduation mm	精度 Accuracy mm	L mm	a mm	b mm	c mm	d mm
157-100	0-150	0.02	± 0.03	250	100	Ø1.5	5	10
157-100-1	0-150	0.02	± 0.03	250	150	Ø1.5	5	10
157-101	0-150	0.05	± 0.05	250	100	Ø1.5	5	10
157-101-1	0-150	0.05	± 0.05	250	150	Ø1.5	5	10
157-102	0-200	0.02	± 0.03	300	100	Ø1.5	5	10
157-102-1	0-200	0.02	± 0.03	300	150	Ø1.5	5	10
157-103	0-200	0.05	± 0.05	300	100	Ø1.5	5	10
157-103-1	0-200	0.05	± 0.05	300	150	Ø1.5	5	10
157-106	0-300	0.02	± 0.04	400	100	Ø1.5	5	10
157-106-1	0-300	0.02	± 0.04	405	150	Ø1.5	5	11
157-106-2	0-300	0.02	± 0.04	405	200	Ø1.5	5	11
157-107	0-300	0.05	± 0.08	400	100	Ø1.5	5	10
157-107-1	0-300	0.05	± 0.08	405	150	Ø1.5	5	11

货 号 Code NO.	测量范围 Measuring Range mm	分度值 Graduation mm	精度 Accuracy mm	L mm	a mm	b mm	c mm	d mm
157-107-2	0-300	0.05	± 0.08	405	200	Ø1.5	5	11
157-108	0-400	0.02	± 0.05	505	150	Ø1.5	5	11
157-108-1	0-400	0.02	± 0.05	505	200	Ø1.5	5	11
157-108-2	0-400	0.02	± 0.05	505	250	Ø1.5	5	11
157-109	0-400	0.05	± 0.08	505	150	Ø1.5	5	11
157-109-1	0-400	0.05	± 0.08	505	200	Ø1.5	5	11
157-109-2	0-400	0.05	± 0.08	505	250	Ø1.5	5	11
157-110	0-500	0.02	± 0.05	605	150	Ø1.5	5	11
157-110-1	0-500	0.02	± 0.05	605	200	Ø1.5	5	11
157-110-2	0-500	0.02	± 0.05	605	250	Ø1.5	5	11
157-111	0-500	0.05	± 0.08	605	150	Ø1.5	5	11
157-111-1	0-500	0.05	± 0.08	605	200	Ø1.5	5	11
157-111-2	0-500	0.05	± 0.08	605	250	Ø1.5	5	11

袖珍游标深度尺
Thread Vernier Depth Gauge

S/STL hardened

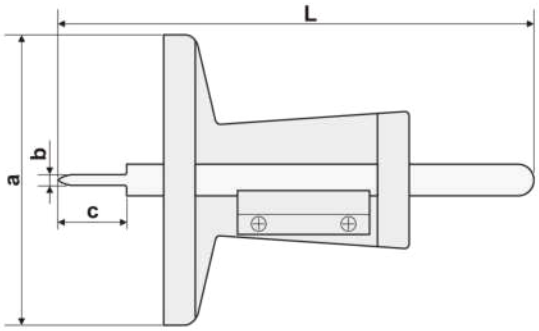

主要特点:
- 外形小巧，便于携带
- 专用于测量各种车轮外胎防滑花纹深度

FEATURES
- Easy to carry
- Used for measuring the tire thread depth

货 号 Code NO.	测量范围 Measuring Range mm	分度值 Graduation mm	精度 Accuracy mm	L mm	a mm	b mm	c mm
157-030	0-30	0.1	± 0.1	90	55	2	13

HAFFMAN
High Precision Tools

让测量更简单

E

高度卡尺类
HEIGHT GAUGES





诚信为本·科技立业
SINCERITY & TECHNOLOGY

带手轮数显高度尺
Digital Height Gauge with Hand-wheel

GB/T | S/STL hardened | SPC 数据接口

尺身截面

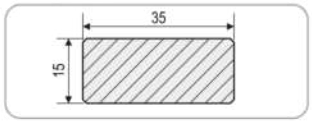

杠杆表支架（选配）

适用:0-500/600　货号:131-105-700

划线头（标配）

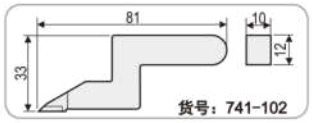

货号：741-102

分辨力:0.01mm
Resolution:0.01mm

主要特点:
- 用于高度测量和划线
- 带电源开关
- 移动框由手轮驱动，使用更方便
- 任意位置清零，便于相对测量与绝对测量转换
- 任意位置公制与英制转换
- 带预置功能
- 带有微调装置
- 划线爪镶硬质合金

FEATURES
- Used for height measurements and scribing
- Power on/off
- With handwheel, easy to use
- Zero-setting at any position, convenient for relative and absolute measure conversion
- Mm/inch conversion at any position
- With preset function
- With fine adjustment device
- With carbide-tipped scriber

货 号 Code NO.	测量范围 Measuring Range mm	精度 Accuracy mm	重量 Weight kg
131-603	0-300	±0.04	6.6
131-605	0-500	±0.05	8.0
131-606	0-600	±0.05	8.4

E

数显高度尺
Digital Height Gauge

GB/T | S/STL hardened | SPC 数据接口

货 号 Code NO.	测量范围 Measuring Range mm	精度 Accuracy mm	重量 Weight kg	d mm	t mm
131-103GA	0-300	±0.04	2.4	23	6
131-105GA	0-500	±0.05	5.2	31	10.5
131-106GA	0-600	±0.05	5.6	31	10.5
131-108GA	0-800	±0.06	11.9	50	16
131-110G	0-1000	±0.07	12.6	50	16
131-115G	0-1500	±0.11	17.8	50	16
131-120G	0-2000	±0.14	19.2	50	16

划线头（标配）

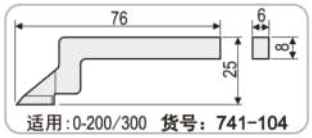

适用:0-200/300　货号：741-104

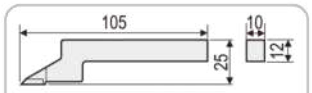

适用:0-500/600　货号：741-105

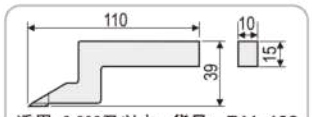

适用:0-800及以上　货号：741-103

分辨力:0.01mm
Resolution:0.01mm

主要特点:
- 用于高度测量和划线
- 带电源开关
- 任意位置清零，便于相对测量与绝对测量转换
- 任意位置公制与英制转换
- 带数据保持功能
- 带预置功能
- 带公差带设置功能
- 带有微调装置
- 划线爪镶硬质合金

FEATURES
- Used for height measurements and scribing
- Power on/off
- Zero-setting at any position, convenient for relative and absolute measure conversion
- Mm/inch conversion at any position
- Data hold
- With preset function
- Tolerances setting
- With fine adjustment device
- Carbide-tipped scriber facilitates fine scribing on work pieces

尺身截面

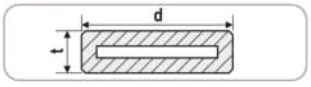

杠杆表支架（选配）

适用:0-300及以内　货号:131-103-700

适用:0-500/600　货号:131-105-700

适用:0-800及以上　货号:131-110-700

备注: 蓝牙高度尺请转到150页蓝牙连接数据采集管理系统了解咨询.

木工用数显高度尺
Woodworking Digital Height Gauge

GB/T | S/STL hardened | SPC 数据接口

分辨力:0.01mm
Resolution:0.01mm

主要特点:
- 专用于木工划线，高度测量，使用方便
- 轻巧铝质底座，铝座底部镶磁铁可吸附在铁板上
- 任意位置清零，便于相对测量与绝对测量转换
- 任意位置公制与英制转换

FEATURES
- Designed for woodworker's workshop, used to adjust saw blade, scribing and height measurements
- With a light aluminum base, magnet inlaid
- Zero-setting at any position, convenient for relative and absolute measure conversion
- Mm/inch conversion at any position

货 号 Code NO.	测量范围 Measuring Range mm	精度 Accuracy mm
131-130	0-110	±0.1
131-131	0-200	±0.1

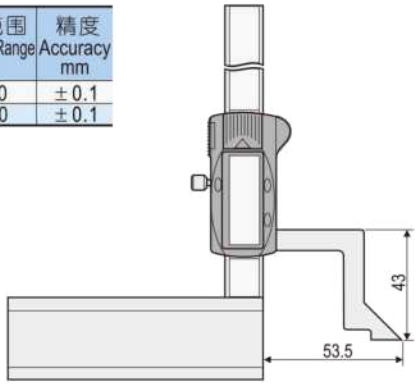

E

带表高度尺
Dial Height Gauge

GB/T | S/STL hardened

主要特点:
- 读数清晰、直观、精确
- 划线爪镶硬质合金
- 微调架使移动能实现微进给

FEATURES
- Clear, direct and accurate reading
- With carbide-tipped scriber
- Fine-adjustment carriage to feed the slider finely

货 号 Code NO.	测量范围 Measuring Range mm	分度值 Graduation mm/inch	精度 Accuracy mm	示值/周 Range/rev.	重量 Weight kg	d mm	t mm
191-146	0-300	0.02	±0.04	2	2.4	21	6
191-148	0-500	0.02	±0.05	2	5.2	31	10.5
191-150	0-600	0.02	±0.05	2	5.3	31	10.5

尺身截面

划线头（标配）

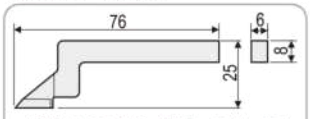

适用:0-200/300 **货号：741-104**

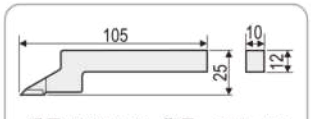

适用:0-500/600 **货号：741-105**

杠杆表支架（选配）

适用:0-300及以内 货号:131-103-700

适用:0-500/600 货号:131-105-700

游标高度尺
Vernier Height Gauge

GB/T | S/STL hardened

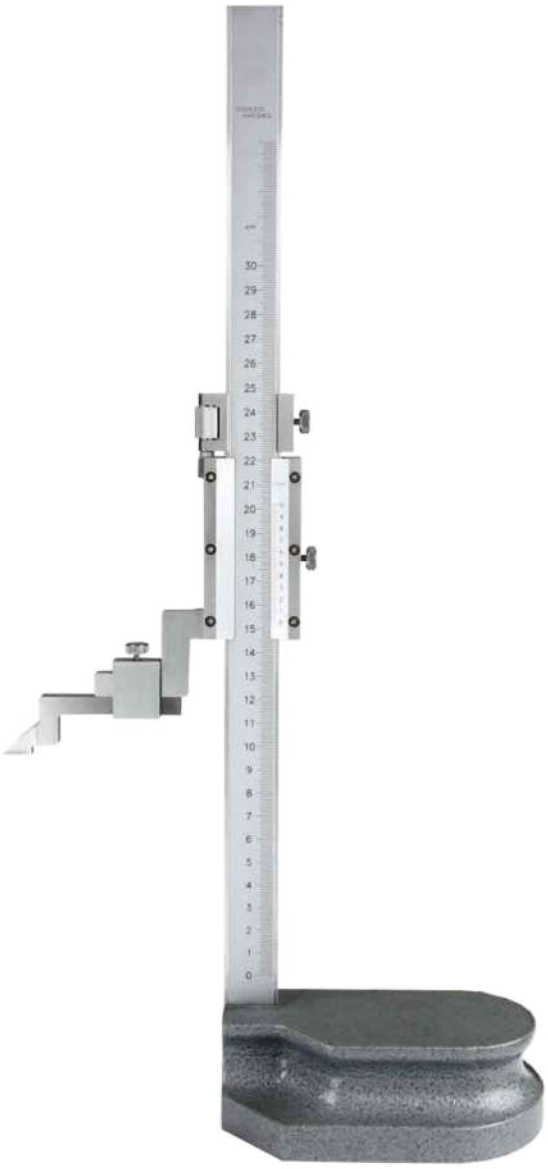

主要特点:
- 用于高度测量和划线
- 划线爪镶硬质合金
- 带有微调装置

FEATURES
- Used for height measurements and scribing
- With carbide-tipped scriber
- With fine adjustment device

货号Code NO. 闭式Mono Block	货号Code NO. 开式Open Block	测量范围 Measuring Range mm	分度值 Graduation mm/inch	精度 Accuracy mm	重量 Weight kg	d mm	t mm
161-102A	161-102KA	0-200	0.02	±0.03	2.2	23	6
161-103A	161-103KA	0-200	0.05	±0.05	2.2	23	6
161-106A	161-106KA	0-300	0.02	±0.04	2.3	23	6
161-107A	161-107KA	0-300	0.05	±0.06	2.3	23	6
161-110	161-110K	0-500	0.02	±0.05	5.3	31	10.5
161-111	161-111K	0-500	0.05	±0.07	5.3	31	10.5
161-112	161-112K	0-600	0.02	±0.06	5.6	31	10.5
161-113	161-113K	0-600	0.05	±0.10	5.6	31	10.5
161-114	161-114K	0-800	0.02	±0.07	12.0	31	10.5
161-115	161-115K	0-800	0.05	±0.10	12.0	31	10.5
—	161-116	0-1000	0.02	±0.07	12.6	50	16
—	161-117	0-1000	0.05	±0.10	12.6	50	16
—	161-118	0-1500	0.02	±0.11	18.2	50	16
—	161-119	0-1500	0.05	±0.16	18.2	50	16
—	161-120	0-2000	0.02	±0.14	21.5	50	16
—	161-121	0-2000	0.05	±0.20	21.5	50	16

E

划线头（标配）

尺身截面

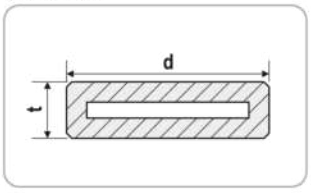

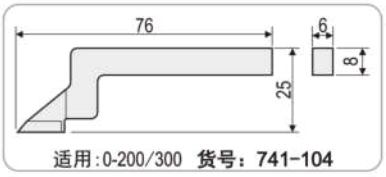

适用:0-200/300 **货号：741-104**

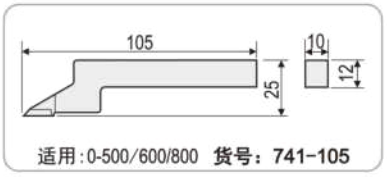

适用:0-500/600/800 **货号：741-105**

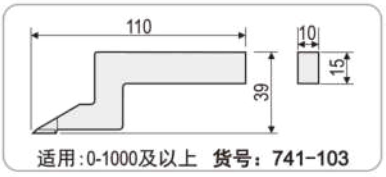

适用:0-1000及以上 **货号：741-103**

杠杆表支架（选配）

适用:0-300及以内 货号:131-103-700

适用:0-500/600/800 货号:131-105-700

适用:0-1000及以上 货号:131-110-700

HAFFMAN
High Precision Tools
让测量更简单

F

非标卡尺类
NONSTANDARD CALIPERS

诚信为本·科技立业
SINCERITY & TECHNOLOGY

蓝牙刀头内沟槽数显卡尺

Bluetooth Digital Caliper with Knife-edged Measuring Points for Inside Grooves

S/STL hardened

NEW

分辨力:0.01mm
Resolution:0.01mm

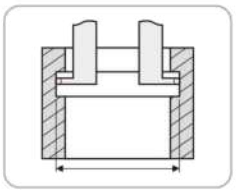

主要特点:

- 爪形能重叠，可伸入较小的孔中测量内沟槽尺寸
- 内置蓝牙，可把测量数据传输到手机、平板和电脑
- 两种工作模式: 简易连接软件模式和HID配对键盘模式
- 具备OTA无线升级功能，功能定制升级，无需返厂
- 开阔地传输距离≤10米　工业环境传输距离≤7米

FEATURES

- Overlapping jaws used for narrow inside groove measurements
- Built-in Bluetooth, measurement data can be transmitted to mobile phones, tablets and computers
- Two working modes: simple connection software mode and HID paired keyboard mode
- With OTA wireless upgrade function, function customization and upgrade, no need to return to the factory
- Transmission distance ≤ 10 m(open land); ≤7 m(industrial environment)

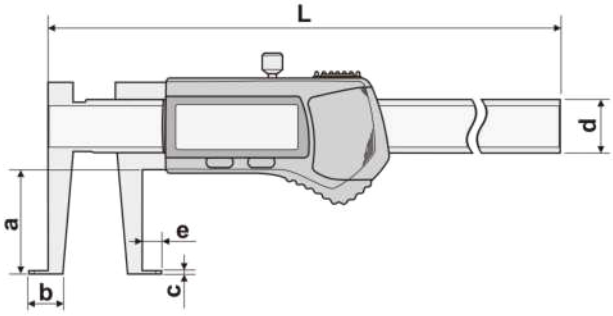

货 号 Code NO.	测量范围 Measuring Range mm	精度 Accuracy mm	L mm	a mm	b mm	c mm	d mm	e mm
115-111BT	14-150	±0.05	240	30	12	1	16	5
115-112BT	15-200	±0.05	290	40	13	1	16	5
115-113BT	17-300	±0.06	400	50	15	1.5	16	5

无线数据连接示意图
Wireless data connection diagram

注: 其它类型的非标数显卡尺也可以定制成相应的蓝牙卡尺.

F

扁头外沟槽数显卡尺

Digital Caliper with Flat Measuring Points for Outside Grooves

S/STL hardened | SPC 既福祖口

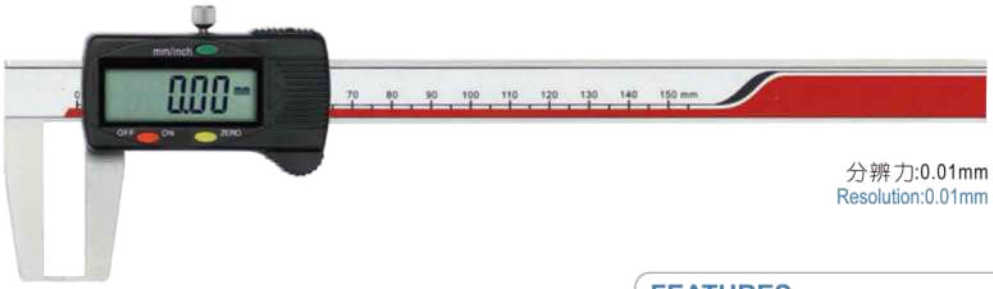

分辨力:0.01mm
Resolution:0.01mm

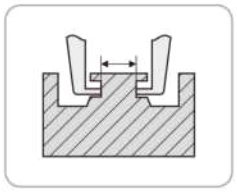

主要特点:

- 方便精确测量外沟槽尺寸
- 任意位置清零，便于相对测量与绝对测量转换
- 任意位置公制与英制转换

FEATURES

- Used for outside groove measurements
- Zero-setting at any position, convenient for relative and absolute measure conversion
- Mm/inch conversion at any position

货 号 Code NO.	测量范围 Measuring Range mm	精度 Accuracy mm	L mm	a mm	b mm	c mm	d mm	e mm
114-101	0-150	±0.04	250	40	15	1	16	5
114-101-1	0-150	±0.05	250	70	20	2	16	7
114-101-2	0-150	±0.05	290	100	30	2	20	10
114-102	0-200	±0.04	310	50	19	1	16	7
114-102-1	0-200	±0.05	310	80	23	1.5	16	9
114-102-2	0-200	±0.05	340	110	34	2	20	12
114-103	0-300	±0.05	410	60	21	1.5	16	8
114-103-1	0-300	±0.06	440	100	30	2	20	10
114-103-2	0-300	±0.06	490	150	36	2	24	12
114-105	0-500	±0.06	690	100	34	2	24	12
114-105-1	0-500	±0.07	690	150	36	2	24	12
114-105-2	0-500	±0.07	690	200	36	2	24	12

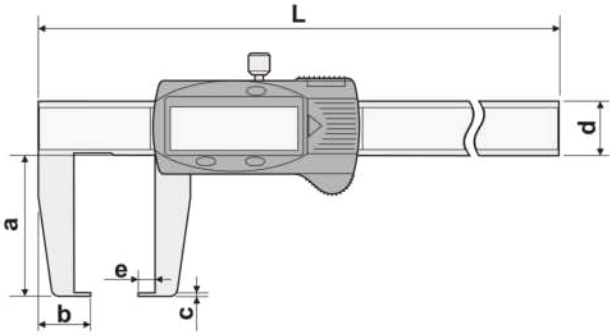

F

圆柱头外沟槽数显卡尺

Digital Caliper with Round Measuring Points for Outside Grooves

S/STL hardened | SPC 既福祖口

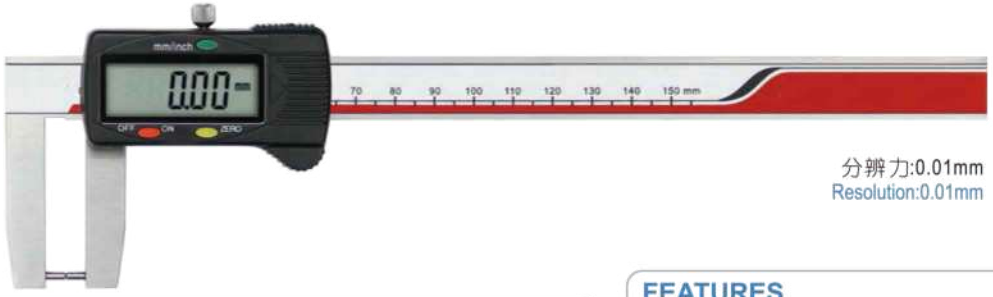

分辨力:0.01mm
Resolution:0.01mm

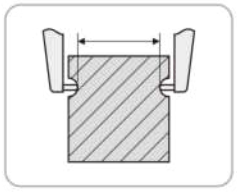

主要特点:

- 方便精确测量圆弧形外沟槽尺寸
- 任意位置清零，便于相对测量与绝对测量转换
- 任意位置公制与英制转换

FEATURES

- Used for arc-shaped outside groove measurements
- Zero-setting at any position, convenient for relative and absolute measure conversion
- Mm/inch conversion at any position

货 号 Code NO.	测量范围 Measuring Range mm	精度 Accuracy mm	L mm	a mm	b mm	c mm	d mm	e mm	f mm
114-111	0-150	±0.04	250	40	3	10	16	5	Ø2
114-111-1	0-150	±0.05	250	70	3	13	16	7	Ø3
114-111-2	0-150	±0.05	290	100	3	20	20	10	Ø3
114-112	0-200	±0.04	310	50	3	12	16	7	Ø2
114-112-1	0-200	±0.05	310	80	3	14	16	9	Ø3
114-112-2	0-200	±0.05	340	110	3	22	20	12	Ø3
114-113	0-300	±0.05	410	60	3	13	16	8	Ø3
114-113-1	0-300	±0.06	440	100	3	20	20	10	Ø3
114-113-2	0-300	±0.06	490	150	3	20	24	12	Ø3
114-115	0-500	±0.06	690	100	3	20	24	12	Ø3
114-115-1	0-500	±0.07	690	150	3	20	24	12	Ø3
114-115-2	0-500	±0.07	690	200	3	20	24	12	Ø3

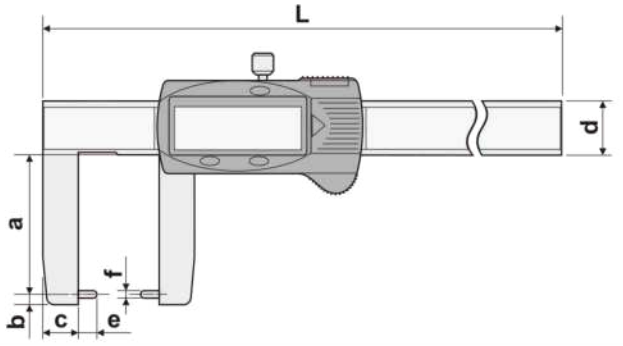

扁头内沟槽数显卡尺

Digital Caliper with Flat Measuring Points for Inside Grooves

S/STL hardened | SPC 欧福福口

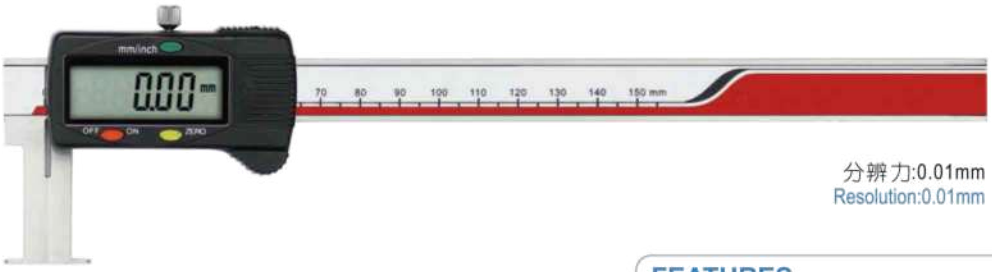

分辨力:0.01mm
Resolution:0.01mm

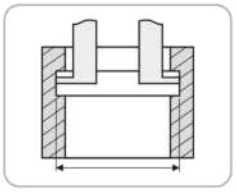

主要特点:

- 方便精确测量内沟槽尺寸
- 带预置功能
- 任意位置清零，便于相对测量与绝对测量转换
- 任意位置公制与英制转换

FEATURES

- Used for inside groove measurements
- With preset function
- Zero-setting at any position, convenient for relative and absolute measure conversion
- Mm/inch conversion at any position

货 号 Code NO.	测量范围 Measuring Range mm	精度 Accuracy mm	L mm	a mm	b mm	c mm	d mm	e mm
115-101	22-150	±0.05	250	30	11	1	16	5
115-101-1	35-150	±0.06	250	60	17.5	1.5	16	6
115-101-2	50-150	±0.06	270	90	25	2	20	8
115-102	25-200	±0.05	310	40	12.5	1	16	5
115-102-1	40-200	±0.06	310	70	20	1.5	16	7
115-102-2	60-200	±0.06	320	100	30	2	20	10
115-103	30-300	±0.06	410	50	15	1.5	16	5
115-103-1	50-300	±0.07	410	80	25	1.5	16	8
115-103-2	60-300	±0.07	420	110	30	2	20	10
115-105	40-500	±0.07	680	90	20	1.5	24	5
115-105-1	60-500	±0.08	680	120	30	2	24	10
115-105-2	80-500	±0.08	680	150	40	3	24	16

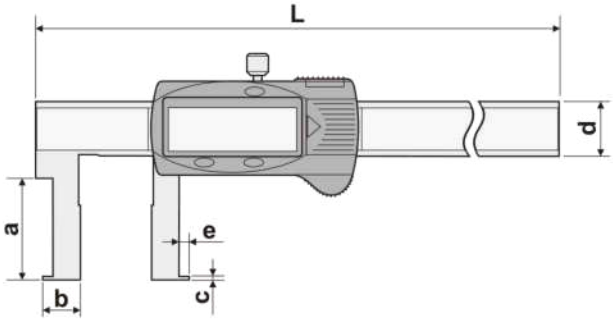

F

圆柱头内沟槽数显卡尺

Digital Caliper with Round Measuring Points for Inside Grooves

S/STL hardened | SPC 欧福福口

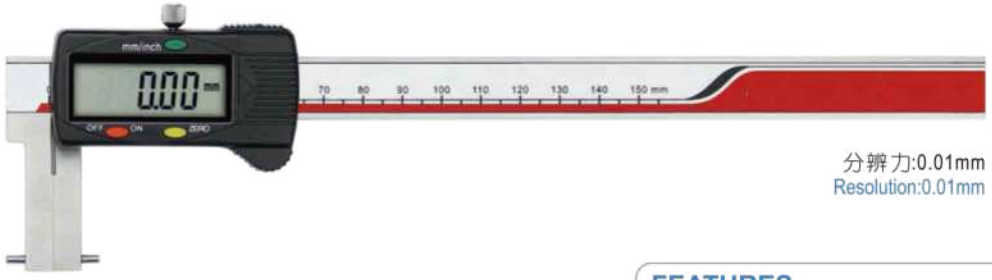

分辨力:0.01mm
Resolution:0.01mm

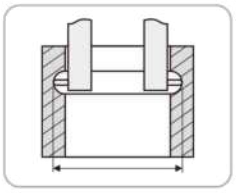

主要特点:

- 方便精确测量圆弧形内沟槽尺寸
- 带预置功能
- 任意位置清零，便于相对测量与绝对测量转换
- 任意位置公制与英制转换

FEATURES

- Used for arc-shaped inside groove measurements
- With preset function
- Zero-setting at any position, convenient for relative and absolute measure conversion
- Mm/inch conversion at any position

货 号 Code NO.	测量范围 Measuring Range mm	精度 Accuracy mm	L mm	a mm	b mm	c mm	d mm	e mm	f mm
115-121	24-150	±0.05	250	30	3	7	16	5	Ø2
115-121-1	35-150	±0.05	250	60	3	11.5	16	6	Ø2
115-121-2	50-150	±0.06	270	90	4	17	20	8	Ø3
115-122	25-200	±0.05	310	40	3	7.5	16	5	Ø2
115-122-1	40-200	±0.05	310	70	3	13	16	7	Ø3
115-122-2	60-200	±0.05	320	100	3	20	20	10	Ø3
115-123	30-300	±0.07	410	50	3	10	16	5	Ø2
115-123-1	50-300	±0.07	410	80	3	15	16	10	Ø3
115-123-2	60-300	±0.07	420	110	3	20	20	10	Ø3
115-125	40-500	±0.07	680	90	3	15	24	5	Ø3
115-125-1	60-500	±0.08	680	120	3	20	24	10	Ø3
115-125-2	80-500	±0.08	680	150	3	24	24	16	Ø3

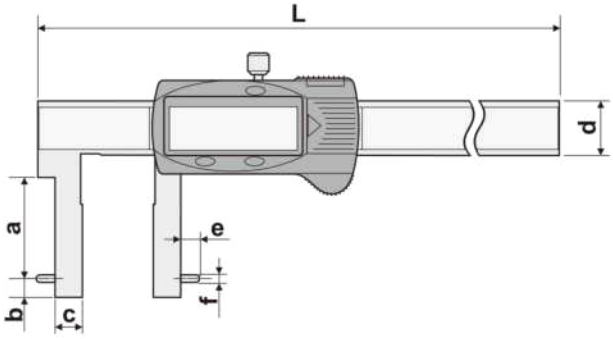

刀头内沟槽数显卡尺

Digital Caliper with Knife-edged Measuring Points for Inside Grooves

S/STL hardened | SPC 既福祖口

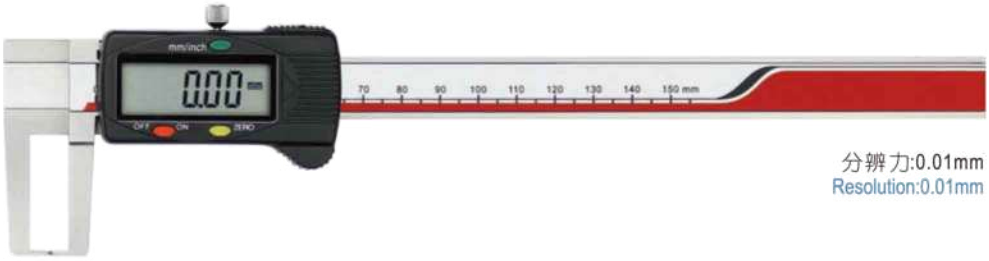

分辨力:0.01mm
Resolution:0.01mm

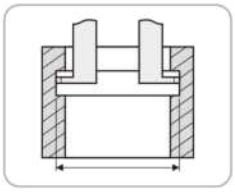

主要特点:

- 爪形能重叠，可伸入较小的孔中测量内沟槽尺寸
- 任意位置清零，便于相对测量与绝对测量转换
- 任意位置公制与英制转换

FEATURES

- Overlapping jaws used for narrow inside groove measurements
- Zero-setting at any position, convenient for relative and absolute measure conversion
- Mm/inch conversion at any position

货 号 Code NO.	测量范围 Measuring Range mm	精度 Accuracy mm	L mm	a mm	b mm	c mm	d mm	e mm
115-111	14-150	±0.05	240	30	12	1	16	5
115-111-1	19-150	±0.06	240	60	17	1.5	16	6
115-111-2	25-150	±0.06	291	90	23	3	20	8
115-111-3	8-150	±0.06	240	40	6	1	16	2
115-111*40*3	10-150	±0.06	240	40	8	1	16	3
115-112	15-200	±0.05	290	40	13	1	16	5
115-112-1	22-200	±0.06	290	70	20	1.5	16	7
115-112-2	29-200	±0.06	347	100	27	3	20	10
115-113	17-300	±0.06	400	50	15	1.5	16	5
115-113-1	26-300	±0.07	400	80	24	1.5	16	8
115-113-2	33-300	±0.07	453	110	31	3.5	20	12
115-115	25-500	±0.07	670	90	23	1.5	24	6
115-115-1	35-500	±0.08	670	120	33	1.5	24	8
115-115-2	47-500	±0.08	670	150	45	2	24	20

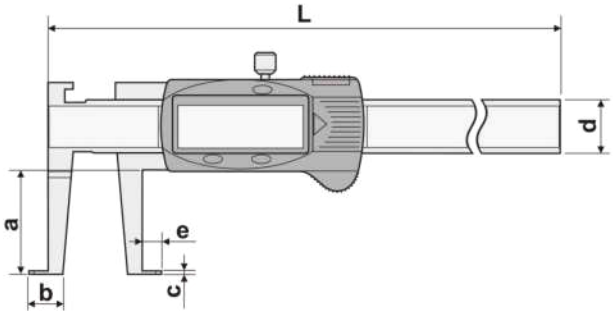

F

刀头双内沟数显卡尺

Double Inside Groove Digital Caliper with Knife-edged Measuring faces

S/STL hardened | SPC 既福祖口

分辨力:0.01mm
Resolution:0.01mm

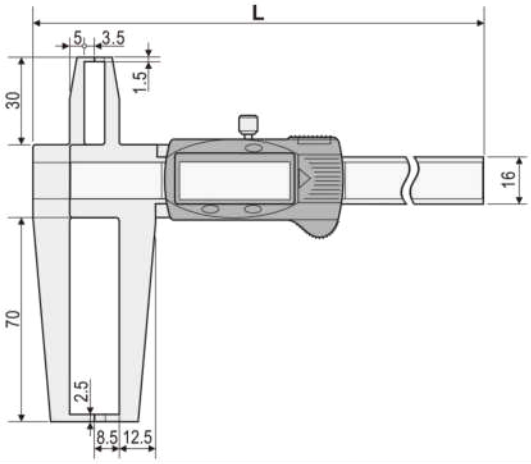

主要特点:

- 便于测量小孔内的内沟槽尺寸
- 任意位置清零，便于相对测量与绝对测量转换
- 任意位置公制与英制转换

FEATURES

- Used for measuring the inside groove in small hole
- Zero-setting at any position, convenient for relative and absolute measure conversion
- Mm/inch conversion at any position

货 号 Code NO.	测量范围 Measuring Range mm	精度 Accuracy mm	L mm
115-231	上爪:13-150 下爪:24-150	±0.05	270
115-232	上爪:13-200 下爪:24-200	±0.06	320
115-233	上爪:13-300 下爪:24-300	±0.06	425

细尖爪数显卡尺
Digital Caliper with Pointed Jaws

S/STL hardened | SPC 数据接口

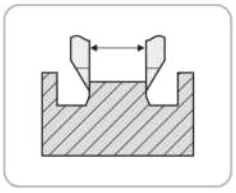

分辨力:0.01mm
Resolution:0.01mm

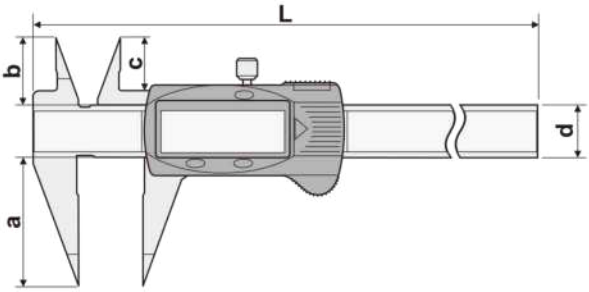

主要特点:
- 爪形细小，用于测量窄小空间的局部尺寸
- 任意位置清零，便于相对测量与绝对测量转换
- 任意位置公制与英制转换

FEATURES
- The narrow pointed jaws used for small grooves measurements
- Zero-setting at any position, convenient for relative and absolute measure conversion
- Mm/inch conversion at any position

货 号 Code NO.	测量范围 Measuring Range mm	精度 Accuracy mm	L mm	a mm	b mm	c mm	d mm
111-200	0-100	±0.04	170	30	17	12.5	13
111-201	0-150	±0.04	236	40	21	16.5	16
111-202	0-200	±0.04	286	50	24	19.5	16
111-203	0-300	±0.05	400	60	25	21.5	16

F

伸缩爪数显卡尺
Digital Caliper with Exchangeable Measuring Jaws

S/STL hardened | SPC 数据接口

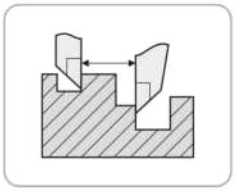

分辨力:0.01mm
Resolution:0.01mm

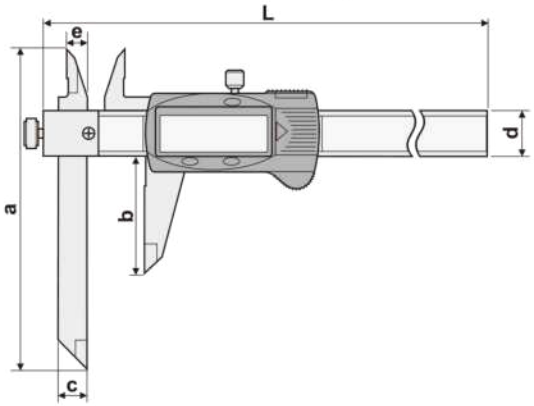

主要特点:
- 爪可伸缩，便于测量不等高平面尺寸
- 任意位置清零，便于相对测量与绝对测量转换
- 任意位置公制与英制转换

FEATURES
- Main scale jaw can be slid up and down for facilitate measurement of stepped sections
- Zero-setting at any position, convenient for relative and absolute measure conversion
- Mm/inch conversion at any position

货 号 Code NO.	测量范围 Measuring Range mm	精度 Accuracy mm	L mm	a mm	b mm	c mm	d mm	e mm
117-101	0-150	±0.04	249	110	40	10	17	7
117-102	0-200	±0.04	299	120	50	10	17	7
117-103	0-300	±0.05	399	130	60	10	17	7
117-105	0-500	±0.06	685	210	100	22	24	11

背量爪式锥测头中心距数显卡尺

Center Distance Digital Caliper with Back Jaws

S/STL hardened　SPC 既强相口

分辨力:0.01mm
Resolution:0.01mm

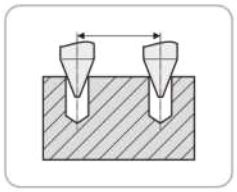

主要特点:

- 用于测量圆孔中心距、孔边距尺寸，便于俯视读数
- 带预置功能
- 任意位置清零，便于相对测量与绝对测量转换
- 任意位置公制与英制转换

FEATURES

- Used for measuring hole C-to-C and E-to-C distances and easily read from above
- With preset function
- Zero-setting at any position, convenient for relative and absolute measure conversion
- Mm/inch conversion at any position

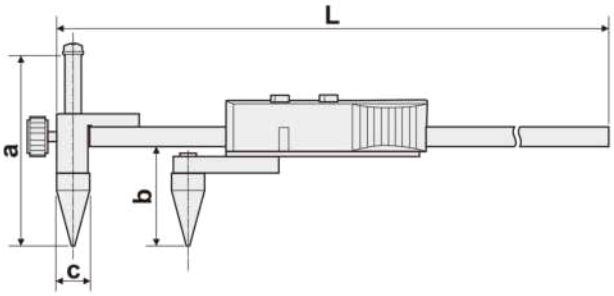

货 号 Code NO.	测量范围 Measuring Range mm	精度 Accuracy mm	L mm	a mm	b mm	c mm
119-151	10-150	±0.05	280	64	30	Ø10
119-152	10-200	±0.05	330	64	30	Ø10
119-153	10-300	±0.07	430	64	30	Ø10

F

锥测头中心距数显卡尺

Center Distance Digital Caliper with Conical Measuring Tips

S/STL hardened　SPC 既强相口

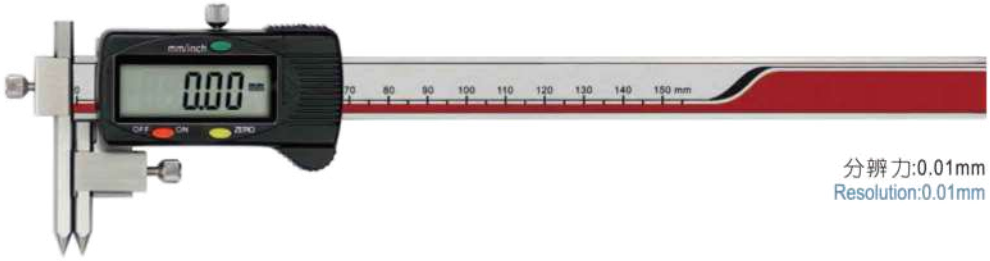

分辨力:0.01mm
Resolution:0.01mm

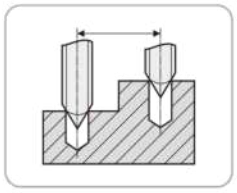

主要特点:

- 可换锥形测头用于测量圆孔中心距、孔边距尺寸
- 带预置功能
- 任意位置清零，便于相对测量与绝对测量转换
- 任意位置公制与英制转换

FEATURES

- Used for measuring hole C-to-C and E-to-C distances
- With preset function
- Zero-setting at any position, convenient for relative and absolute measure conversion
- Mm/inch conversion at any position

货 号 Code NO.	测量范围 Measuring Range mm	精度 Accuracy mm	L mm	a mm	b mm	c mm	d mm
119-111	5-150	±0.05	241	60	34	Ø5	16
119-111-1	10-150	±0.05	246	100	60	Ø10	16
119-112	5-200	±0.05	290	60	34	Ø5	16
119-112-1	10-200	±0.05	295	100	60	Ø10	16
119-113	5-300	±0.07	390	60	34	Ø5	16
119-113-1	10-300	±0.07	395	100	60	Ø10	16
119-115	5-500	±0.09	705	80	45	Ø5	24
119-120	10-1000	±0.14	1240	125	55	Ø10	31
119-120-1	20-1000	±0.14	1240	125	55	Ø20	31

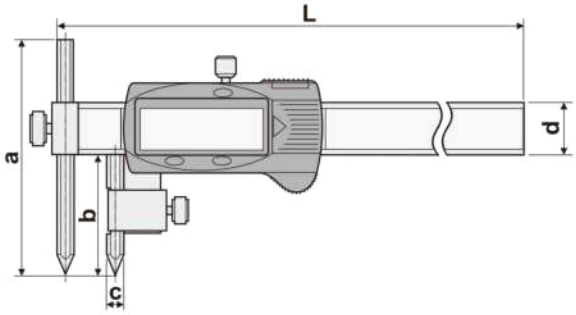

柱测头中心距数显卡尺
Center Distance Digital Caliper with Pillar Heads

S/STL hardened

分辨力:0.01mm
Resolution:0.01mm

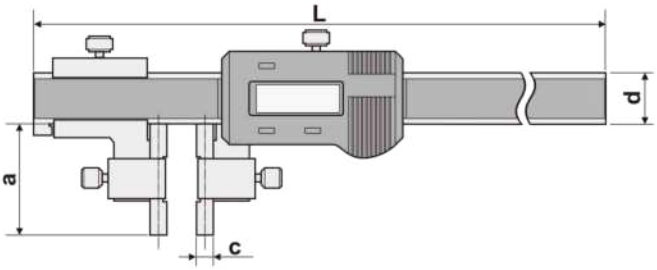

主要特点:
- 当被测孔直径大于测头直径时，可通过一定的操作步骤直接读出被测孔之间的中心距离

FEATURES
- Direct reading for center distance measurement between holes

货 号 Code NO.	测量范围 Measuring Range mm	精度 Accuracy mm	L mm	a mm	c mm	d mm
119-101	5-150	±0.05	426	35	Ø5	16
119-102	5-200	±0.05	526	35	Ø5	16
119-103	5-300	±0.07	726	35	Ø5	16

F

管壁厚数显卡尺
Tube Thickness Digital Caliper

S/STL hardened　SPC 数据接口

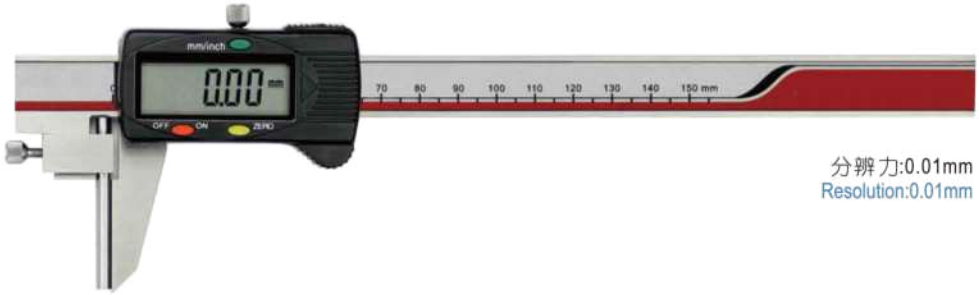

分辨力:0.01mm
Resolution:0.01mm

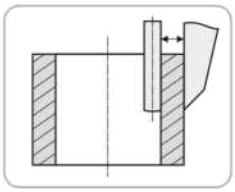

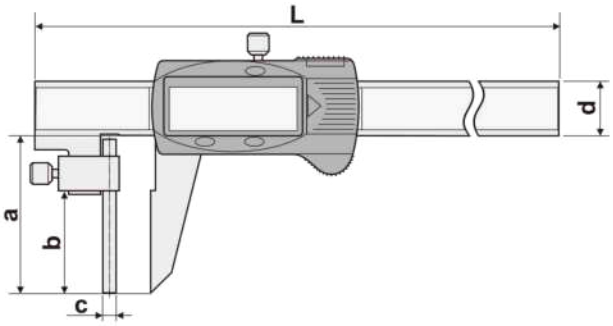

主要特点:
- 专用于测量圆管的壁厚
- 任意位置清零，便于相对测量与绝对测量转换
- 任意位置公制与英制转换

FEATURES
- Used for tube wall thickness measurements
- Zero-setting at any position, convenient for relative and absolute measure conversion
- Mm/inch conversion at any position

货 号 Code NO.	测量范围 Measuring Range mm	精度 Accuracy mm	L mm	a mm	b mm	c mm	d mm
116-101	0-150	±0.04	250	46	30	Ø4	16
116-102	0-200	±0.04	300	56	40	Ø4	16
116-103	0-300	±0.05	400	66	50	Ø4	16

双宽量面数显卡尺
Digital Caliper with Large-sized Measuring Faces

S/STL hardened | SPC 欧盟超口

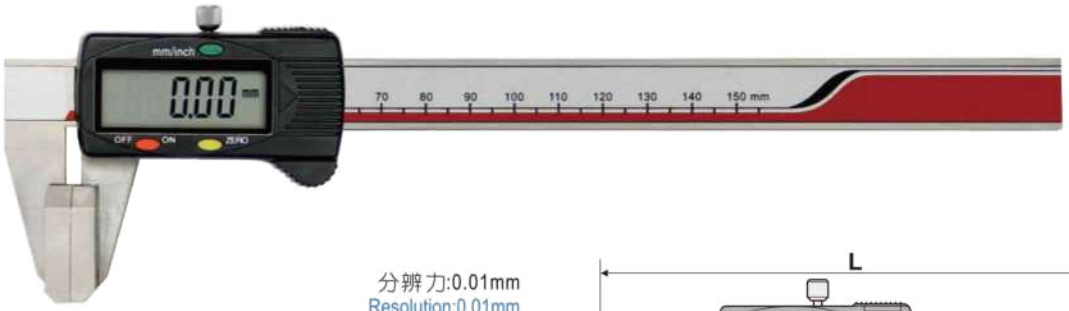

分辨力:0.01mm
Resolution:0.01mm

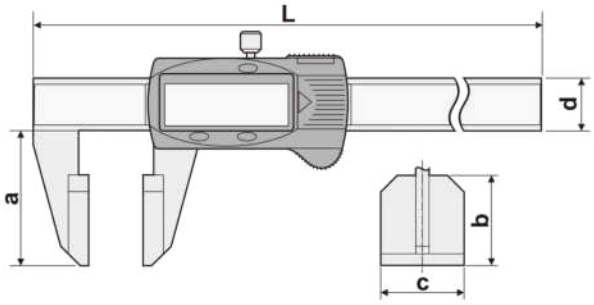

主要特点:
- 用于测量表面跨度大的工件，如钢丝绳等
- 用于测量表面较软的工件，如海绵、橡胶等

FEATURES
- Used for measuring work piece with wide surface, like wire rope
- Used for measuring work piece with soft surface, like foam and rubber

货 号 Code NO.	测量范围 Measuring Range mm	精度 Accuracy mm	L mm	a mm	b mm	c mm	d mm
111-901	0-150	±0.05	245	40	27	25	16

F

刀口形数显卡尺
Digital Caliper with Knife-edged Measuring Jaws

S/STL hardened | SPC 欧盟超口

分辨力:0.01mm
Resolution:0.01mm

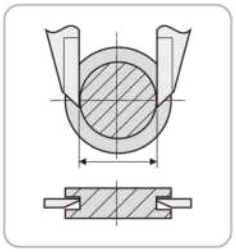

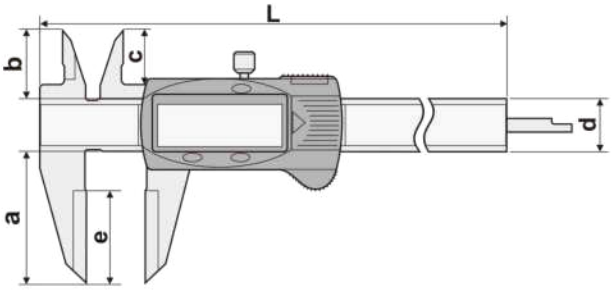

主要特点:
- 用于测量窄小的槽
- 圆形/扁形测深杆可选
- 任意位置清零，便于相对测量与绝对测量转换
- 任意位置公制与英制转换

FEATURES
- Used for narrow groove measurements
- Round and flat depth bar for option
- Zero-setting at any position, convenient for relative and absolute measure conversion
- Mm/inch conversion at any position

货 号 Code NO.	测量范围 Measuring Range mm	精度 Accuracy mm	L mm	a mm	b mm	c mm	d mm	e mm
111-641	0-150	±0.03	236	40	21	16.5	16	28
111-642	0-200	±0.03	286	50	21	19.5	16	36
111-643	0-300	±0.04	400	60	26	21.5	16	44

长爪内径数显卡尺
Digital Caliper with Long Internal Measuring Jaws

S/STL hardened | SPC 数据输出

分辨力:0.01mm
Resolution:0.01mm

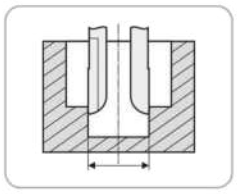

主要特点:
- 加长爪形能重叠，可伸入较深的孔中测量阶梯孔孔径
- 任意位置清零，便于相对测量与绝对测量转换
- 任意位置公制与英制转换

FEATURES
- Overlapping long jaws used for narrow inside diameter measurement in deep bores
- Zero-setting at any position, convenient for relative and absolute measure conversion
- Mm/inch conversion at any position

货 号 Code NO.	测量范围 Measuring Range mm	精度 Accuracy mm	L mm	a mm	b mm	d mm
113-101	15-150	±0.06	250	60	12	16
113-101-1	17-150	±0.06	250	90	14	16
113-101-2	24-150	±0.06	350	150	22	24
113-102	17-200	±0.06	305	75	14	16
113-102-1	20-200	±0.06	305	100	17	16
113-102-2	24-200	±0.06	400	150	22	24
113-103	18-300	±0.06	410	90	15	16
113-103-1	22-300	±0.06	500	120	20	24
113-103-2	24-300	±0.06	500	150	22	24
113-105	22-500	±0.08	700	100	20	24
113-105-1	24-500	±0.08	700	150	22	24
113-105-2	32-500	±0.08	700	200	30	24

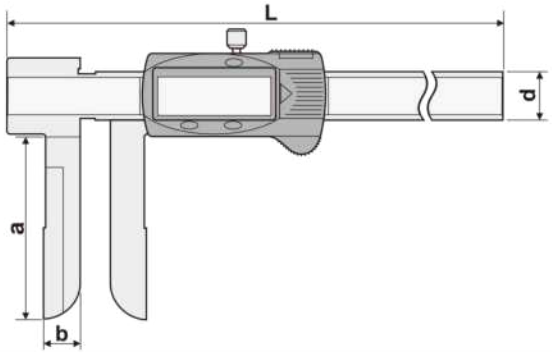

F

内槽宽数显卡尺
Hook Type Digital Caliper for Inner Grooves

S/STL hardened | SPC 数据输出

分辨力:0.01mm
Resolution:0.01mm

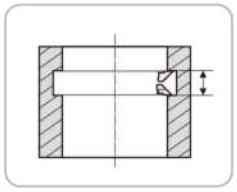

主要特点:
- 可用于测量孔中沟槽宽和沟槽位置尺寸
- 任意位置清零，便于相对测量与绝对测量转换
- 任意位置公制与英制转换

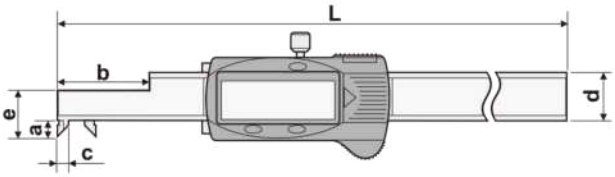

FEATURES
- Used for inside grooves' width measurements in deep bores
- Zero-setting at any position, convenient for relative and absolute measure conversion
- Mm/inch conversion at any position

货 号 Code NO.	测量范围 Measuring Range mm	精度 Accuracy mm	L mm	a mm	b mm	c mm	d mm	e mm
115-151	3-125	±0.03	236	4	24	3	12.5	12
115-151-1	3-150	±0.03	260	4	24	3	12.5	12
115-152	3-200	±0.04	310	4	24	3	12.5	12
115-153	4-300	±0.04	466	5	86	4	15	14

数显焊缝尺
Digital Welding Seam Gage

S/STL hardened | SPC 既福超口

分辨力:0.01mm
Resolution:0.01mm

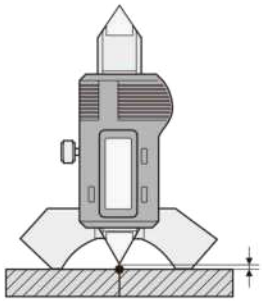

平焊缝测量 Flat Weld
0-10mm

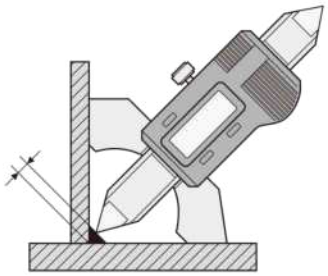

角焊缝测量Angle Welds
0-20mm

货 号 Code NO.	测量范围 Measuring Range mm	精度 Accuracy mm
118-121	0-10/0-20	±0.03

主要特点:
- 用于测量平焊缝、角焊缝的高度尺寸测量
- 有60°、70°、80°、90°四种角度样板
- 外形小巧便于携带
- 任意位置清零，便于相对测量与绝对测量转换
- 任意位置公制与英制转换

FEATURES
- Used for measuring welding seam thickness
- With 60°, 70°, 80°, 90° angle models
- Easy to carry
- Zero-setting at any position, convenient for relative and absolute measure conversion
- Mm/inch conversion at any position

F

倒角数显卡尺
Digital Chamfering Caliper

S/STL hardened

分辨力:0.01mm
Resolution:0.01mm

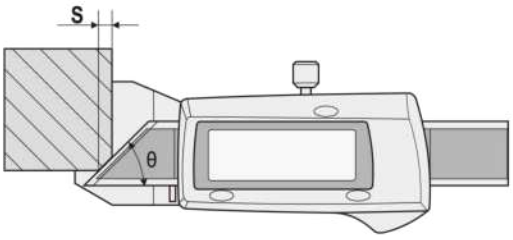

主要特点:
- 任意位置公英制转换
- 外形小巧，便于携带
- 可以定制其它合理范围内的角度

FEATURES
- Mm/inch conversion at any position
- Easy to carry due to light weight
- Angle can be customized

货 号 Code NO.	测量范围(S) Measuring Range mm	精度 Accuracy mm	测量倒角角度 θ Angle of chamfering
119-420	0-8	±0.03	30°
119-420-1	0-8	±0.03	45°
119-420-2	0-8	±0.03	60°

上同向爪数显卡尺
Digital Caliper with Upper Jaws in One Direction

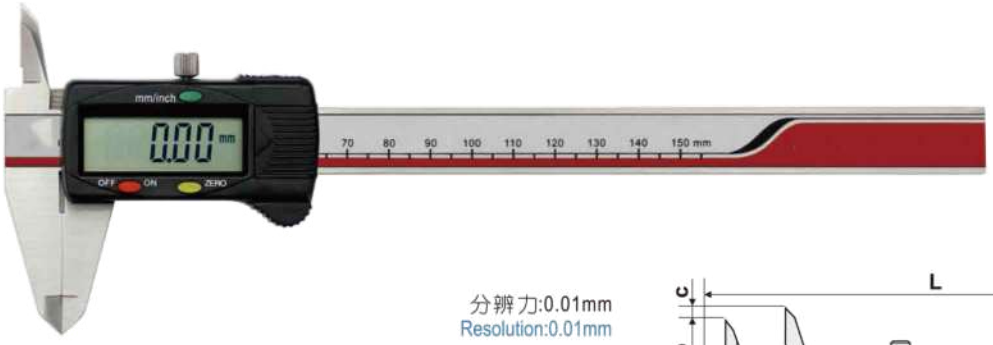

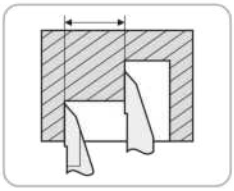

分辨力:0.01mm
Resolution:0.01mm

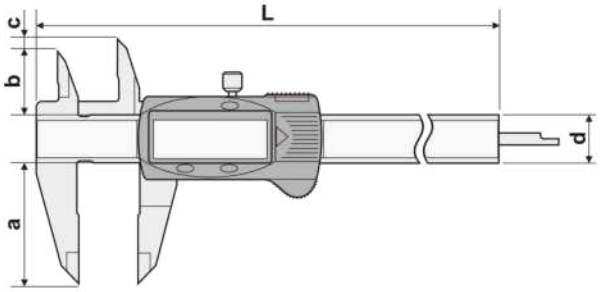

主要特点:
- 可用于测量同一平面上同向距离尺寸
- 任意位置清零，便于相对测量与绝对测量转换
- 任意位置公制与英制转换

FEATURES
- Used for measuring the distance of surface in the same direction
- Zero-setting at any position, convenient for relative and absolute measure conversion
- Mm/inch conversion at any position

货 号 Code NO.	测量范围 Measuring Range mm	精度 Accuracy mm	L mm	a mm	b mm	c mm	d mm
112-211	0-150	±0.03	236	40	21	0	16
112-211-1	0-150	±0.03	236	40	21	5	16
112-212	0-200	±0.03	286	50	24	0	16
112-212-1	0-200	±0.03	286	50	24	8	16
112-213	0-300	±0.04	400	60	26	0	16
112-213-1	0-300	±0.04	400	60	26	10	16

F

闸圈数显卡尺
Digital Brake Drum Caliper

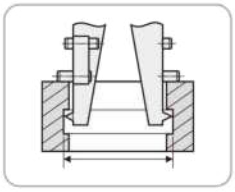

分辨力:0.01mm
Resolution:0.01mm

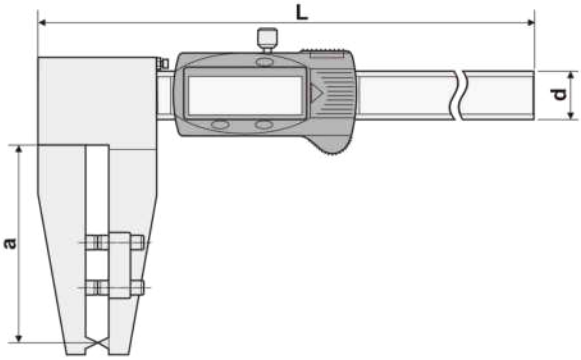

主要特点:
- 可用于汽车刹车毂磨损尺寸检测，使用方便
- 任意位置清零，便于相对测量与绝对测量转换
- 任意位置公制与英制转换

FEATURES
- Used for measuring the wear of brake drum of cars
- Zero-setting at any position, convenient for relative and absolute measure conversion
- Mm/inch conversion at any position

货 号 Code NO.	测量范围 Measuring Range mm	精度 Accuracy mm	L mm	a mm	d mm
113-163	0-300	±0.05	445	85	20
113-164	0-425	±0.07	570	110	20
113-165	0-500	±0.07	710	115	24

单尖头数显卡尺
Digital Caliper with Single Measuring Tip

S/STL hardened | SPC 数据接口

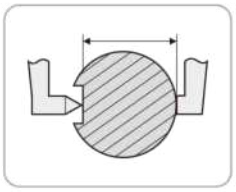

分辨力:0.01mm
Resolution:0.01mm

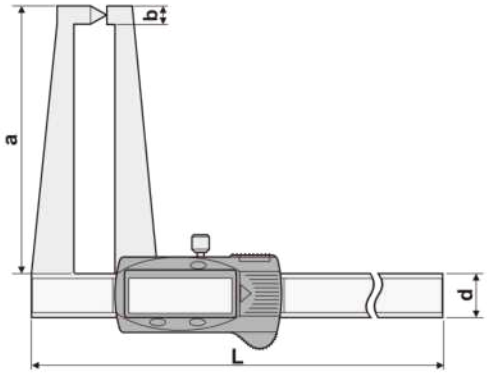

主要特点:
- 主要用于制动盘的厚度磨损检测
- 可用于测量沟槽的厚度尺寸，如：键槽
- 任意位置清零，便于相对测量与绝对测量转换
- 任意位置公制与英制转换

FEATURES
- Used for measuring the thickness of disc brake
- Used for measuring the thickness of groove such as keyways
- Zero-setting at any position, convenient for relative and absolute measure conversion
- Mm/inch conversion at any position

货 号 Code NO.	测量范围 Measuring Range mm	精度 Accuracy mm	L mm	a mm	b mm	d mm
114-121A	0-75	±0.04	178	93	6	16
114-122A	0-125	±0.05	230	93	6	16
114-123A	0-150	±0.05	266	93	6	16

F

碟量面数显卡尺
Digital Caliper with Plate Anvils

S/STL hardened | SPC 数据接口

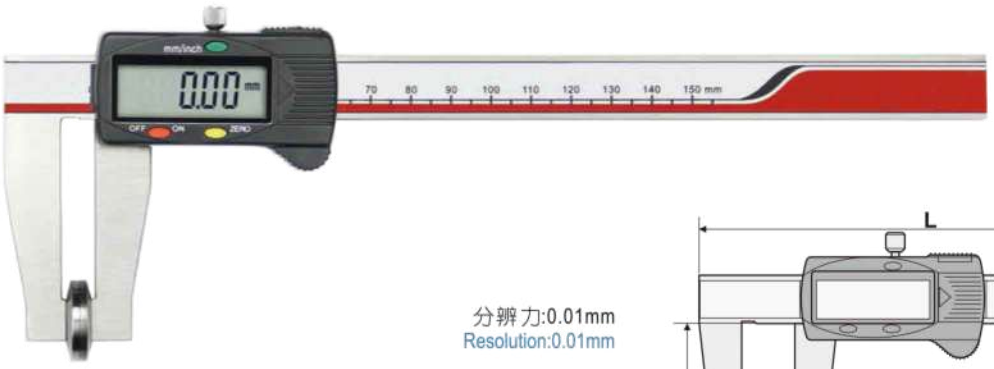

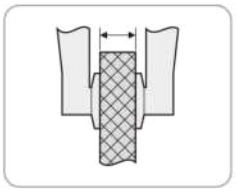

分辨力:0.01mm
Resolution:0.01mm

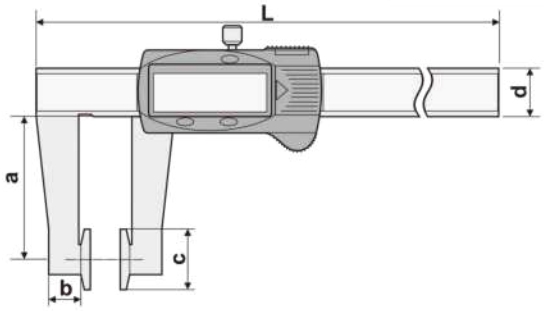

主要特点:
- 可用于测量半软质板材厚度（如：海棉、泡沫、软木板）
- 任意位置清零，便于相对测量与绝对测量转换
- 任意位置公制与英制转换

FEATURES
- Used for measuring the thickness of half soft board (foam, sponge, plank)
- Zero-setting at any position, convenient for relative and absolute measure conversion
- Mm/inch conversion at any position

货 号 Code NO.	测量范围 Measuring Range mm	精度 Accuracy mm	L mm	a mm	b mm	c mm	d mm
112-141	0-150	±0.04	245	50	11	Ø20	16
112-141-1	0-150	±0.04	270	100	13	Ø50	20
112-142	0-200	±0.05	310	80	11	Ø30	16
112-142-1	0-200	±0.05	380	150	20	Ø30	24
112-143	0-300	±0.06	420	120	13	Ø50	20
112-144	0-500	±0.07	680	150	20	Ø50	24

板厚数显卡尺
Digital Thickness Caliper

S/STL hardened | SPC 数据接口

分辨力:0.01mm
Resolution:0.01mm

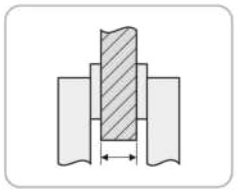

主要特点:
- 可用于各种侧放板材厚度测量，使用方便
- 任意位置清零，便于相对测量与绝对测量转换
- 任意位置公制与英制转换

FEATURES
- Used for measuring the thickness of various of board materials
- Zero-setting at any position, convenient for relative and absolute measure conversion
- Mm/inch conversion at any position

货 号 Code NO.	测量范围 Measuring Range mm	精度 Accuracy mm	L mm	a mm	b mm	c mm	d mm
112-181	0-50	±0.04	140	50	Ø10	2	13
112-181-1	0-50	±0.04	140	80	Ø10	2	13
112-181-2	0-50	±0.04	140	100	Ø10	2	13
112-181-3	0-50	±0.04	180	150	Ø10	2	24
112-181-4	0-50	±0.04	180	200	Ø10	2	24
112-182	0-80	±0.04	170	50	Ø10	2	13
112-182-1	0-80	±0.04	170	80	Ø10	2	13
112-182-2	0-80	±0.04	170	100	Ø10	2	13
112-182-3	0-80	±0.04	210	150	Ø10	2	24
112-182-4	0-80	±0.04	210	200	Ø10	2	24

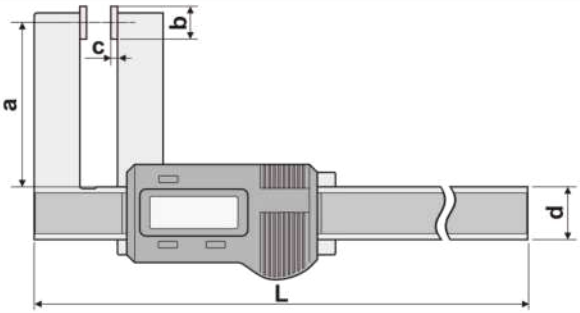

F

外圆弧半径数显卡尺
Digital Caliper for Outer Arc Radius Measurement

S/STL hardened | SPC 数据接口

分辨力:0.01mm
Resolution:0.01mm

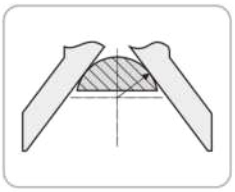

主要特点:
- 可用于非整圆(<1/2圆)半径测量，使用方便
- 任意位置清零，便于相对测量与绝对测量转换
- 任意位置公制与英制转换

FEATURES
- Used for measuring arc radius less than 180°
- Zero-setting at any position, convenient for relative and absolute measure conversion
- Mm/inch conversion at any position

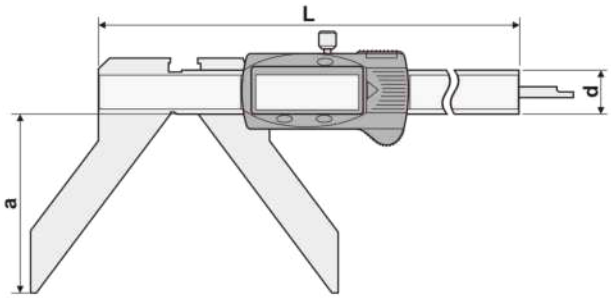

货 号 Code NO.	测量范围 Measuring Range mm	精度 Accuracy mm	L mm	a mm	d mm
118-131	5-150	±0.06	263	65	16
118-132	5-200	±0.10	315	85	16

万向节内槽数显卡尺
Digital Caliper for Universal Joint

S/STL hardened　SPC 既强超口

分辨力:0.01mm
Resolution:0.01mm

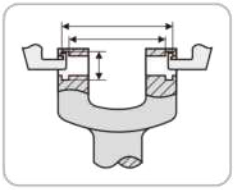

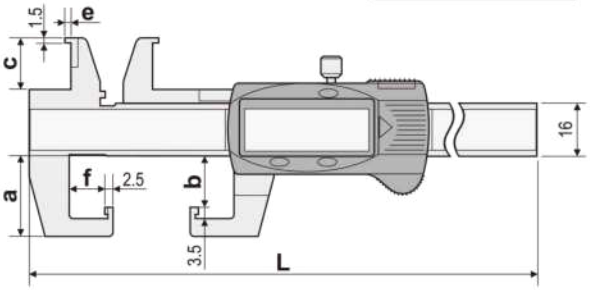

主要特点:
- 专用于万向节钗形件的卡环槽槽宽、槽距测量
- 任意位置清零，便于相对测量与绝对测量转换
- 任意位置公制与英制转换

FEATURES
- Used for gimbal groove measurements
- Zero-setting at any position, convenient for relative and absolute measure conversion
- Mm/inch conversion at any position

货 号 Code NO.	测量范围 Measuring Range mm	精度 Accuracy mm	L mm	a mm	b mm	c mm	e mm	f mm
115-170	0-125	±0.03	232	25	16	16	2	11
115-171	0-150	±0.03	258	25	16	16	2	11
115-172	0-200	±0.03	312	30	21	16.5	2.5	13
115-173	0-300	±0.04	420	30	21	16.5	2.5	13

F

绝对原点数显角度尺
Absolute Digital Universal Bevel Protractor

S/STL hardened

分辨力:1′ /0.01°
Resolution:1′ /0.01°

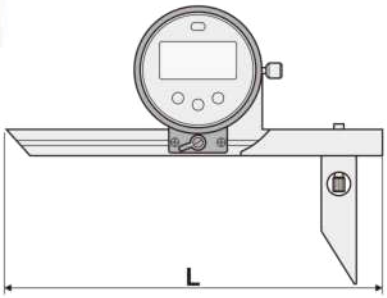

主要特点:
- 绝对式测量和相对式测量，绝对基准零位校准后不受断电或关机等因素影响
- 自动关机时间：产品数不动且无按键动作小于5分钟自动关闭
- 抗干扰等级：EMC-2级

FEATURES
- Absolute and Relative Measurement conversion, no need calibration again after power off or battery changed.
- Auto power off time: 5 mins no use it auto power off
- Anti interference level: EMC-2 level

货 号 Code NO.	尺片货号 Blade Code NO.	测量范围 Measuring Range mm	精度 Accuracy mm	使用温度 Operating Temperatare	L mm
421-501	—	1x360° 2x180° 4x90°	±4′(±0.07°)	0°C-40°C	—
—	421-501-001B-1	—	—	—	150
—	421-501-001B-2	—	—	—	200
—	421-501-001B-2	—	—	—	300

注: 可以定制蓝牙数显角度尺，货号421-501BT.

薄片数显卡尺
Digital Caliper with Thin Jaws

S/STL hardened | SPC 欧盟船口

分辨力:0.01mm
Resolution:0.01mm

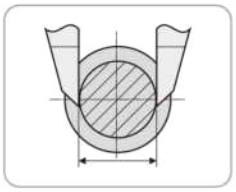

主要特点:
- 专用于窄小的卡环槽测量
- 任意位置清零，便于相对测量与绝对测量转换
- 任意位置公制与英制转换

FEATURES
- Used for narrow groove measurements
- Zero-setting at any position, convenient for relative and absolute measure conversion
- Mm/inch conversion at any position

货 号 Code NO.	测量范围 Measuring Range mm	精度 Accuracy mm	L mm	a mm	b mm	c mm	d mm	e mm	f mm	g mm
111-211	0-150	±0.04	236	40	21	16.5	16	20	3.2	0.75
111-211-1	0-150	±0.04	236	40	21	16.5	16	18	3.2	0.75
111-212	0-200	±0.04	286	50	24	19.5	16	20	3.6	0.75
111-212-1	0-200	±0.04	286	50	24	19.5	16	18	3.6	0.75
111-213	0-300	±0.04	400	60	26	21.5	16	20	3.8	1
111-213-1	0-300	±0.04	400	60	26	21.5	16	18	3.8	1

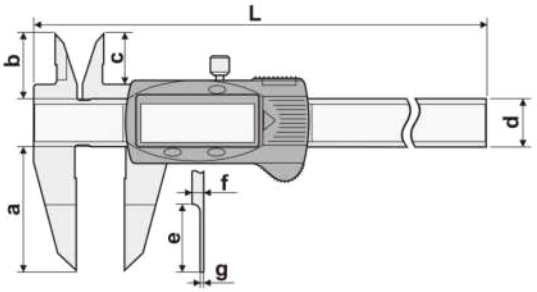

F

齿厚数显卡尺
Digital Gear Tooth Caliper

S/STL hardened

分辨力:0.01mm
Resolution:0.01mm

货 号 Code NO.	测量范围 Measuring Range mm	精度 Accuracy mm	L1 mm	L2 mm	a mm	b mm	d1 mm	d2 mm
118-171D	m1-26	±0.04	170	165	30.5	21	16	16
118-172D	m5-50	±0.04	220	190	55	50.5	16	16

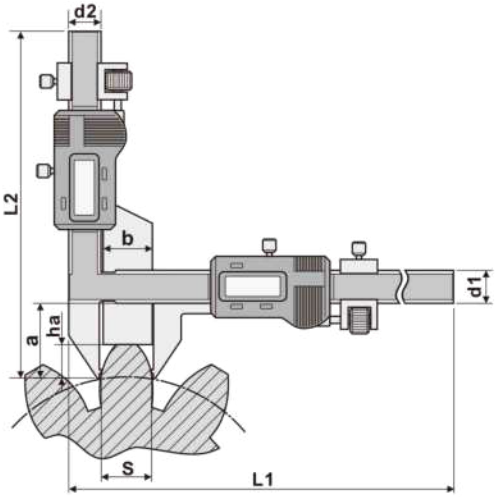

主要特点:
- 专用于齿轮齿厚尺寸的测量
- 任意位置清零，便于相对测量与绝对测量转换
- 任意位置公制与英制转换

FEATURES
- Used for measuring gear thickness
- Zero-setting at any position, convenient for relative and absolute measure conversion
- Mm/inch conversion at any position

高精度内外沟槽数显卡尺

Digital Caliper with High Precision Readout for Inside and Outside Grooves

S/STL hardened | SPC 数据输出口

分辨力:0.005mm
Resolution:0.005mm

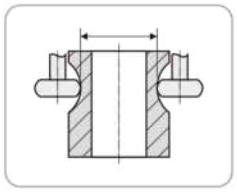

主要特点:

- 精密鼓形测头，专用于测量截面为半圆形的内/外沟槽尺寸(如滑轮槽)
- 显示更高准确度读数，分辨力：0.005mm
- 任意位置清零，便于相对测量与绝对测量转换
- 任意位置公制与英制转换

FEATURES

- Drum-shaped measuring faces used for measuring the arc-shaped outside and inside groove (such as pulley groove)
- High accuracy readout , 0.005mm resolution
- Zero-setting at any position, convenient for relative and absolute measure conversion
- Mm/inch conversion at any position

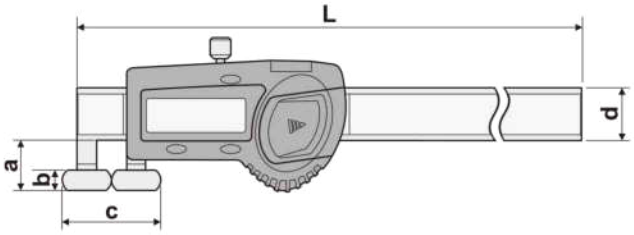

货 号 Code NO.	测量范围 Measuring Range mm	精度 Accuracy mm	L mm	a mm	b mm	c mm	d mm
115-188	ID:20-100 OD:0-120	±0.04	210	15	6	20	16
115-188-1	ID:30-100 OD:0-120	±0.04	220	15	6	30	16

F

上长爪内沟槽数显卡尺（测深杆带钩）

Standard Lower Jaws Digital Caliper with Special Upper Jaws (Hook Type Depth Bar)

S/STL hardened | SPC 数据输出口

分辨力:0.01mm
Resolution:0.01mm

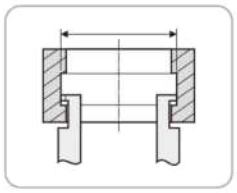

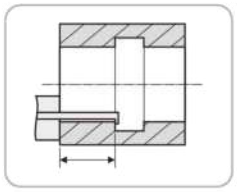

主要特点:

- 加长的上内沟测量爪，便于测量深孔中的内沟槽尺寸
- 带沟测深杆，用于测量深孔中沟槽位置尺寸
- 任意位置清零，便于相对测量与绝对测量转换
- 任意位置公制与英制转换

FEATURES

- Long upper jaws used for inside groove measurements
- With a single hook depth bar, convenient for the groove measurements in a deep bore
- Zero-setting at any position, convenient for relative and absolute measure conversion
- Mm/inch conversion at any position

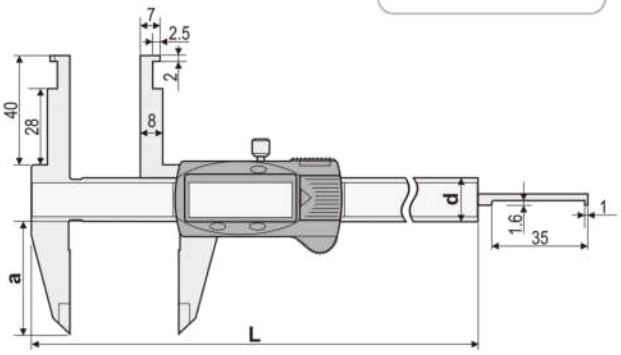

货 号 Code NO.	测量范围 Measuring Range mm	精度 Accuracy mm	L mm	a mm	d mm
113-201	上爪:7-150 下爪:0-150	±0.03	236	40	16

上外爪 / 下内沟槽数显卡尺

Standard Upper Jaws Digital Caliper with Special Lower Jaws

S/STL hardened | SPC 数据输出口

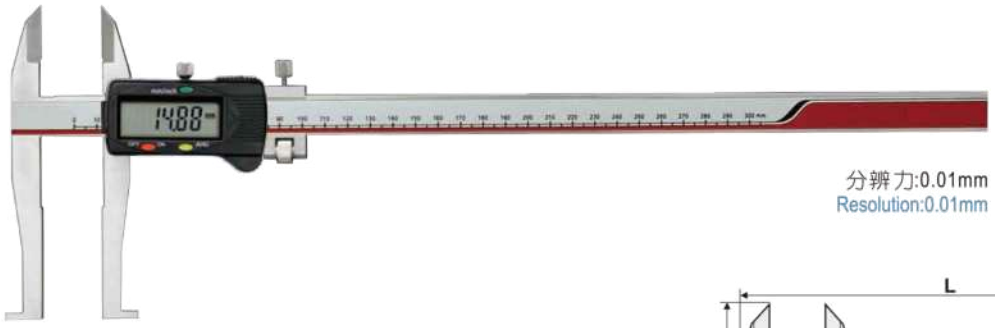

分辨力:0.01mm
Resolution:0.01mm

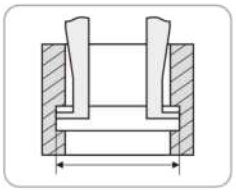

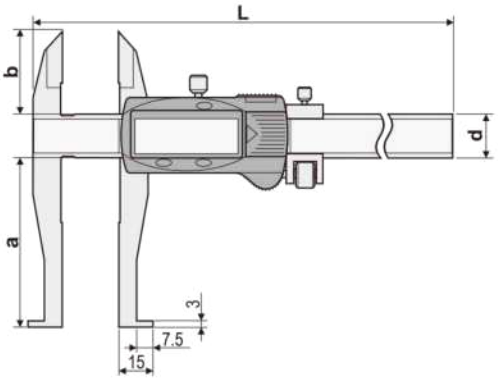

主要特点:

- 加长的下内沟测量爪，便于测量深孔中的内沟槽尺寸，上爪用于测外径
- 任意位置清零，便于相对测量与绝对测量转换
- 任意位置公制与英制转换

FEATURES

- Long lower jaws used for inside groove measurements, upper jaws are used for OD measurements
- Zero-setting at any position, convenient for relative and absolute measure conversion
- Mm/inch conversion at any position

货 号 Code NO.	测量范围 Measuring Range mm	精度 Accuracy mm	L mm	a mm	b mm	d mm
115-453	上爪:0-300 下爪:30-300	±0.04	410	77	38	17

F

上爪内沟槽数显卡尺

Standard LowerJaws Digital Caliper with Special Upper Jaws

S/STL hardened | SPC 数据输出口

分辨力:0.01mm
Resolution:0.01mm

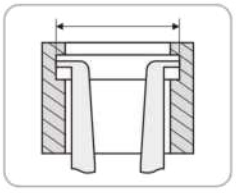

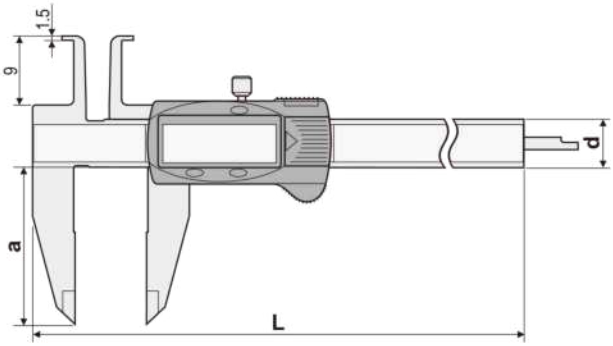

主要特点:

- 带上内沟测量爪，便于测量孔中的内沟槽尺寸，下爪用于测外径
- 任意位置清零，便于相对测量与绝对测量转换
- 任意位置公制与英制转换

FEATURES

- Upper jaws are used for inside groove measurements. Lower jaws are used for OD measurements
- Zero-setting at any position, convenient for relative and absolute measure conversion
- Mm/inch conversion at any position

货 号 Code NO.	测量范围 Measuring Range mm	精度 Accuracy mm	L mm	a mm	d mm
115-431	上爪:5-150 下爪:0-150	±0.03	236	40	16

T 型划线数显卡尺
T Type Digital Scribing Caliper

S/STL hardened | SPC 既福祖口

分辨力:0.01mm
Resolution:0.01mm

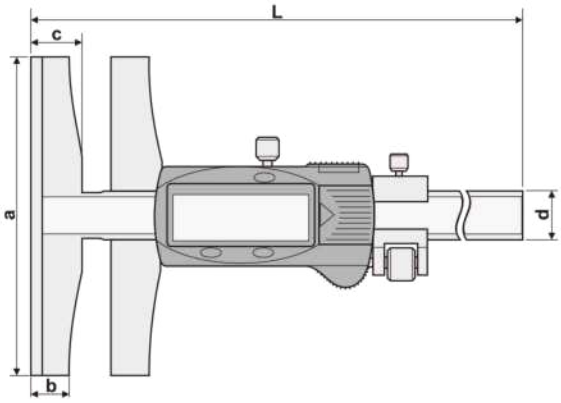

主要特点:
- 便于工件上划线
- 具有数值保持功能

FEATURES
- Easy for scribing
- Can hold the measurements

货 号 Code NO.	测量范围 Measuring Range mm	精度 Accuracy mm	L mm	a mm	b mm	c mm	d mm
121-501	0-150	± 0.07	275	100	10	15	17
121-502	0-200	± 0.07	325	100	10	15	17
121-504	0-300	± 0.08	430	100	10	15	17

F

特殊外沟槽数显卡尺
Digital Caliper for Special Outside Grooves

S/STL hardened | SPC 既福祖口

分辨力:0.01mm
Resolution:0.01mm

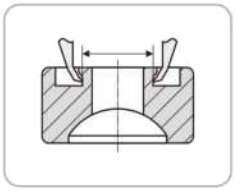

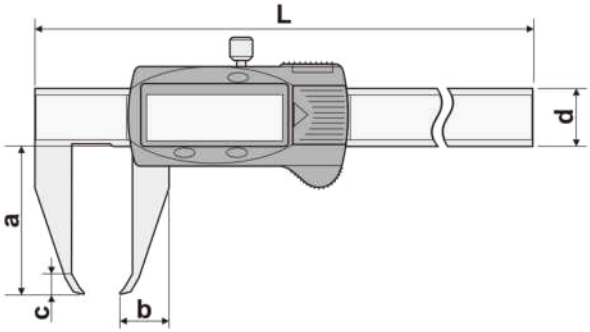

主要特点:
- 专用于测量其它尺子不便测量的沟槽尺寸
- 任意位置清零，便于相对测量与绝对测量转换
- 任意位置公制与英制转换

FEATURES
- Used for special outside groove measurements
- Zero-setting at any position, convenient for relative and absolute measure conversion
- Mm/inch conversion at any position

货 号 Code NO.	测量范围 Measuring Range mm	精度 Accuracy mm	L mm	a mm	b mm	c mm	d mm
114-330	0-100	± 0.03	200	40	13.2	5.4	16

特制密封槽数显卡尺
Special Digital Caliper for Seal Grooves

S/STL hardened | SPC 数据输出

分辨力:0.01mm
Resolution:0.01mm

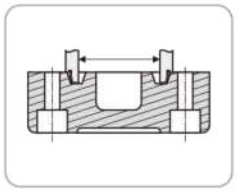

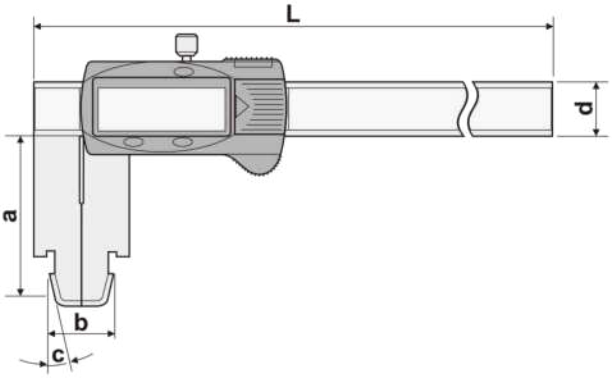

主要特点:
- 专用于测量端盖上特制角度V形密封槽中心直径
- 任意位置清零，便于相对测量与绝对测量转换
- 任意位置公制与英制转换

FEATURES
- Used for measuring the distance between two V-shape seal grooves
- Zero-setting at any position, convenient for relative and absolute measure conversion
- Mm/inch conversion at any position

货 号 Code NO.	测量范围 Measuring Range mm	精度 Accuracy mm	L mm	a mm	b mm	c	d mm
115-463	0-300	±0.03	410	50	19	9°30'/10°/12°/45'14°	17
115-463-1	0-300	±0.03	410	60	19	9°30'/10°/12°/45'14°	17

F

斜爪圆柱头内沟槽数显卡尺
Digital Caliper with Round Measuring Points for Inside Grooves

S/STL hardened | SPC 数据输出

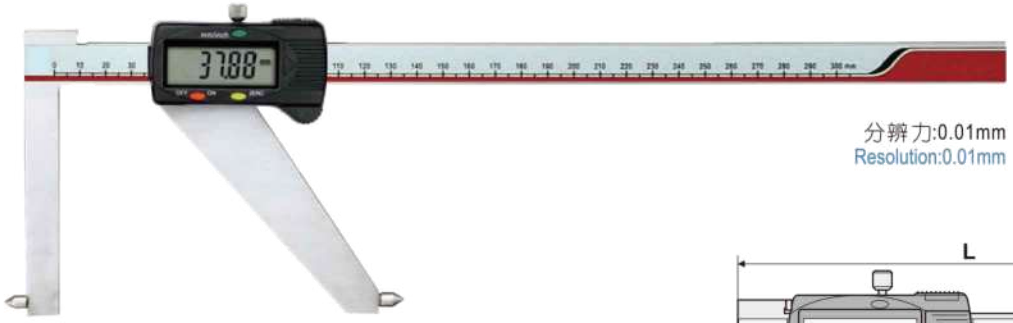

分辨力:0.01mm
Resolution:0.01mm

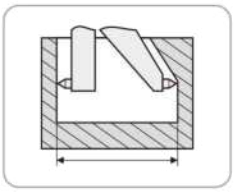

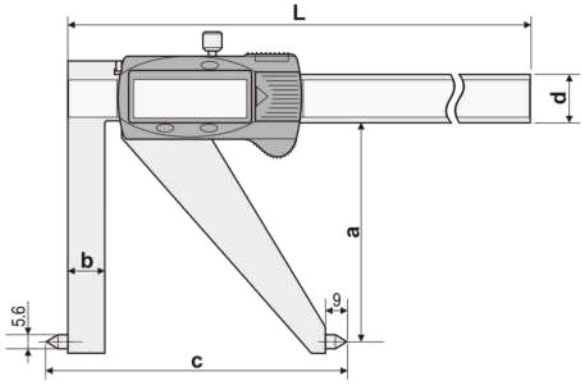

主要特点:
- 用于测量一侧斜面较大的内沟槽尺寸
- 任意位置清零，便于相对测量与绝对测量转换
- 任意位置公制与英制转换

FEATURES
- Used for inside groove measurements on a bevel surface
- Zero-setting at any position, convenient for relative and absolute measure conversion
- Mm/inch conversion at any position

货 号 Code NO.	测量范围 Measuring Range mm	精度 Accuracy mm	L mm	a mm	b mm	c mm	d mm
115-473	120-250	±0.03	350	80	12	120	16
115-475	120-500	±0.04	640	100	15	120	20

带定位面五用数显卡尺

Digital Caliper for Locating the Base Level

S/STL hardened | SPC 数据接口

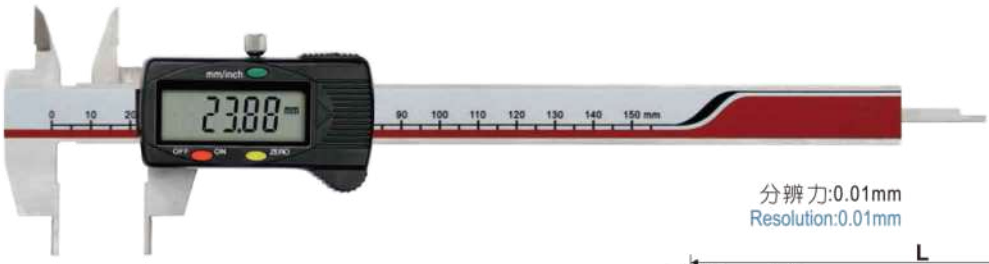

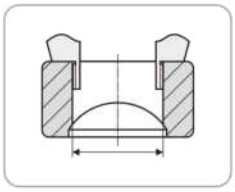

分辨力:0.01mm
Resolution:0.01mm

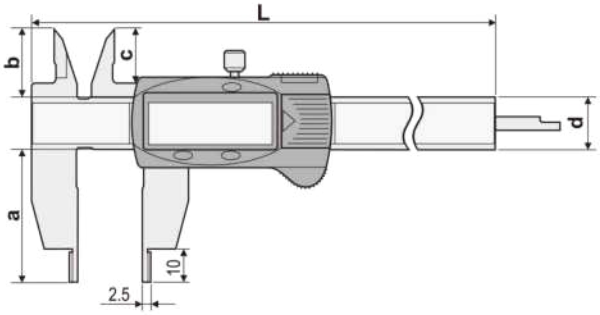

主要特点:

- 下爪带定位面，方便快速测量内径
- 任意位置清零，便于相对测量与绝对测量转换
- 任意位置公制与英制转换

FEATURES

- Locating blocks are easy for ID measurements
- Zero-setting at any position, convenient for relative and absolute measure conversion
- Mm/inch conversion at any position

货 号 Code NO.	测量范围 Measuring Range mm	精度 Accuracy mm	L mm	a mm	b mm	c mm	d mm
112-661	0-150	±0.03	236	40	21	16.5	16
112-662	0-200	±0.03	286	50	24	19.5	16
112-663	0-300	±0.04	400	60	26	21.5	16

F

盘形测头内 / 外沟槽数显卡尺

Digital Caliper with Arc-Shape Measuring Anvils for Inside and Outside Groove

S/STL hardened | SPC 数据接口

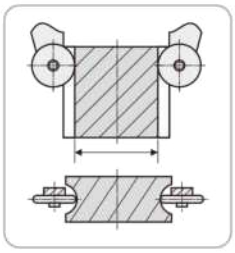

分辨力:0.01mm
Resolution:0.01mm

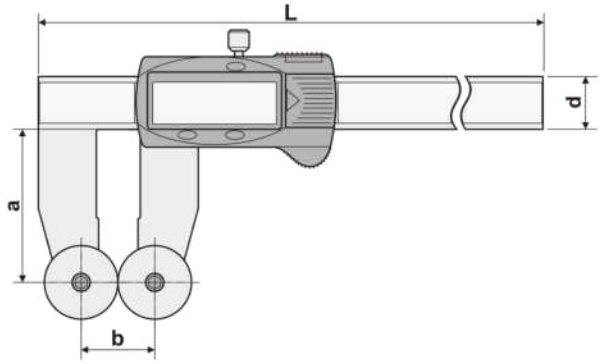

主要特点:

- 精密盘形测头
- 专用于测量截面为半圆形的内/外沟槽尺寸（如滑轮槽）
- 任意位置清零，便于相对测量与绝对测量转换
- 任意位置公制与英制转换

FEATURES

- Arc-shape measuring faces
- Used for measuring the arc-shaped outside and inside groove (such as pulley groove)
- Zero-setting at any position, convenient for relative and absolute measure conversion
- Mm/inch conversion at any position

货 号 Code NO.	测量范围 Measuring Range mm	精度 Accuracy mm	L mm	a mm	b mm	d mm
111-500-T1	0-300	±0.05	415	40	36	17
111-504-T1	0-500	±0.06	670	80	44	24

动定爪带定位面扁头内沟槽数显卡尺

Digital Caliper with Flat Measuring Points and Locating Blocks for Inside Grooves

S/STL hardened | SPC 既福福口

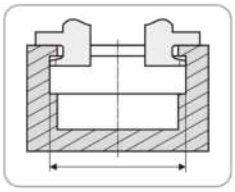

分辨力:0.01mm
Resolution:0.01mm

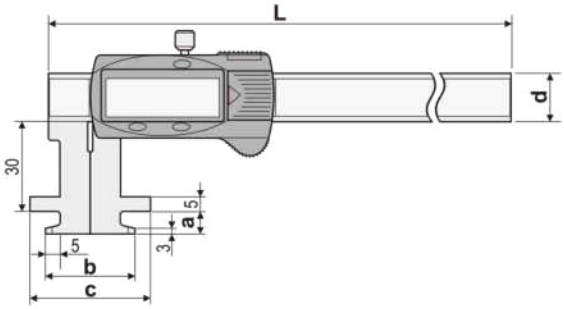

主要特点:

- 动/定爪带定位面，方便快速测量内沟槽尺寸
- 任意位置清零，便于相对测量与绝对测量转换
- 任意位置公制与英制转换

FEATURES

- Jaws with locating blocks, easy for fast inside groove measurements
- Zero-setting at any position, convenient for relative and absolute measure conversion
- Mm/inch conversion at any position

货 号 Code NO.	测量范围 Measuring Range mm	精度 Accuracy mm	L mm	a mm	b mm	c mm	d mm
115-101B	0-150	±0.04	250	7.5	30	40	16
115-101B-1	0-150	±0.04	250	7	30	40	16
115-101B-2	0-150	±0.04	250	10.6	30	40	16
115-101B-3	0-150	±0.04	250	7.5	20	35	16
115-101B-4	0-150	±0.04	250	7.5	20	40	16
115-101B-5	0-150	±0.04	250	7.5	30	35	16

F

上长爪内径数显卡尺

Digital Caliper with Long Knife-edged Upper Jaws

S/STL hardened | SPC 既福福口

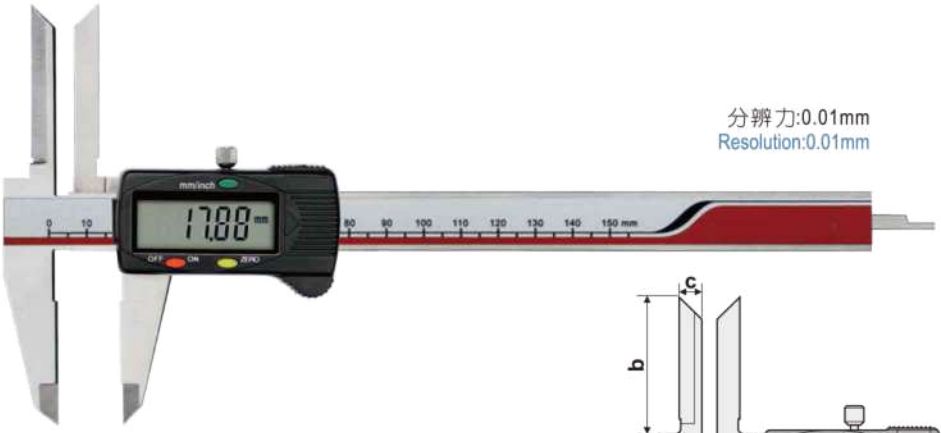

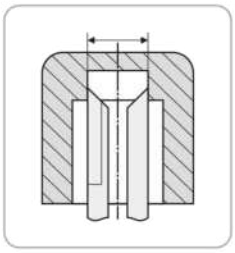

分辨力:0.01mm
Resolution:0.01mm

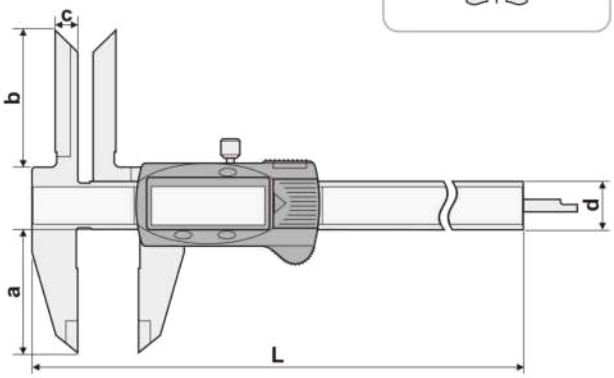

主要特点:

- 加长的上内测量爪，方便测量较深孔的内径
- 任意位置清零，便于相对测量与绝对测量转换
- 任意位置公制与英制转换

FEATURES

- Long upper jaws easy for ID measurements in the depth bore
- Zero-setting at any position, convenient for relative and absolute measure conversion
- Mm/inch conversion at any position

货 号 Code NO.	测量范围 Measuring Range mm	精度 Accuracy mm	L mm	a mm	b mm	c mm	d mm
113-111	0-150	±0.04	236	40	45	7.5	16
113-112	0-200	±0.04	286	50	50	7.5	16
113-113	0-300	±0.05	400	60	45	7.5	17

楔形数显塞尺
Digital Wedge-Shape Feeler Gauge

S/STL hardened　SPC 欧福超口

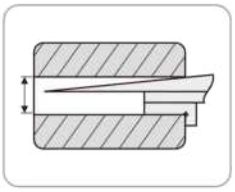

分辨力:0.01mm
Resolution:0.01mm

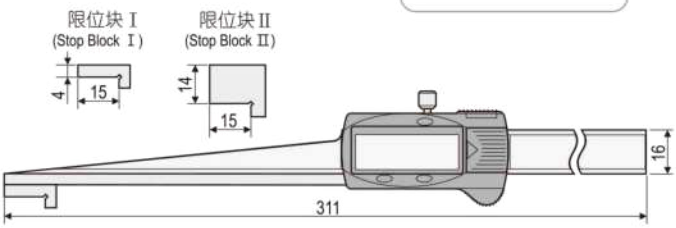

主要特点:
- 用于测量沟缝宽度尺寸
- 任意位置清零，便于相对测量与绝对测量转换
- 任意位置公制与英制转换

FEATURES
- Used for gaps width measurements
- Zero-setting at any position, convenient for relative and absolute measure conversion
- Mm/inch conversion at any position

货 号 Code NO.	测量范围 Measuring Range mm	精度 Accuracy mm
043-201	0.2-10	± 0.03

增加限位块 Additional Stop Block	测量范围 Measuring Range mm
限位块 I(Stop Block I)	10-20
限位块 II(Stop Block II)	20-30

F

多功能数显卡尺
Multi-function Digital Caliper

S/STL hardened　SPC 欧福超口

分辨力:0.01mm
Resolution:0.01mm

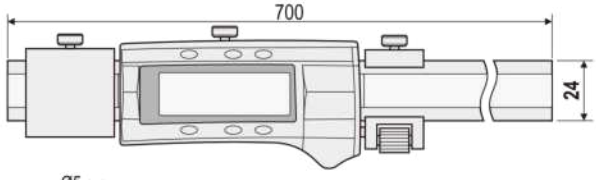

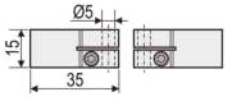

货号: 118-455-035-050

货 号 Code NO.	测量范围 Measuring Range mm	精度 Accuracy mm
118-455	0-500	± 0.05

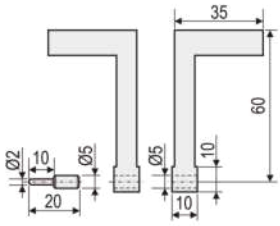

货号: 118-455-022-050

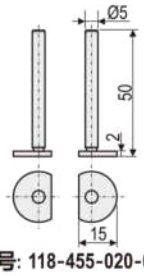

货号: 118-455-020-050

主要特点:
- 配备多种可换测头
- 测量功能齐全，用于测内外沟槽、孔中心距等尺寸，一尺多用
- 任意位置清零，便于相对测量与绝对测量转换
- 任意位置公制与英制转换

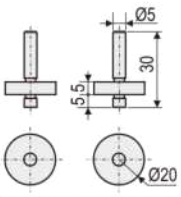

货号: 118-455-020A-050

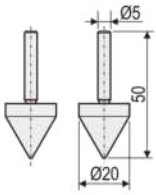

货号: 118-455-020C-050

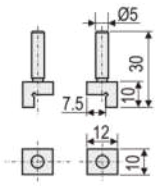

货号: 118-455-020B-050

FEATURES
- Various exchangeable measuring tips for option
- Used for ID, OD and centre distance measurements
- Zero-setting at any position, convenient for relative and absolute measure conversion
- Mm/inch conversion at any position

万用数显卡尺

Universal Digital Caliper with Exchangeable Measuring Points

S/STL hardened　SPC 数据输出

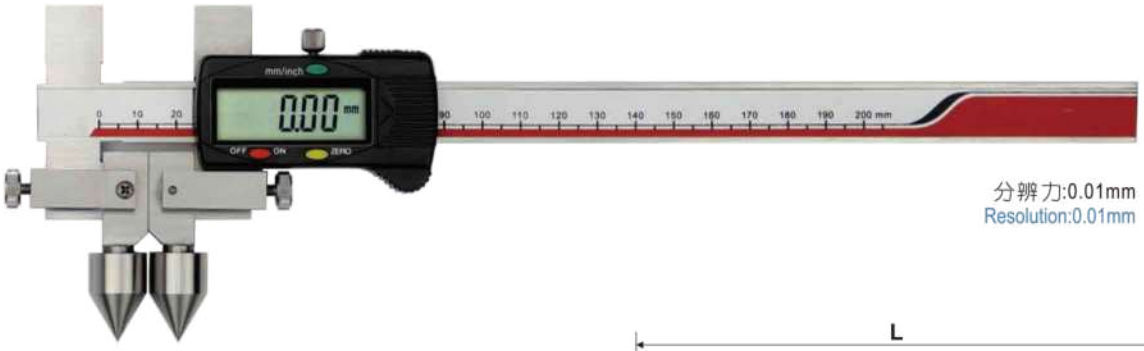

分辨力:0.01mm
Resolution:0.01mm

主要特点:

- 配备多种可换测头，可装在上爪和下爪使用（需选购）
- 测量功能齐全，用于测内外沟槽、孔中心距等尺寸，一尺多用
- 任意位置清零，便于相对测量与绝对测量转换
- 任意位置公制与英制转换

FEATURES

- Various exchangeable measuring tips for option
- Used for ID, OD and centre distance measurements
- Zero-setting at any position, convenient for relative and absolute measure conversion
- Mm/inch conversion at any position

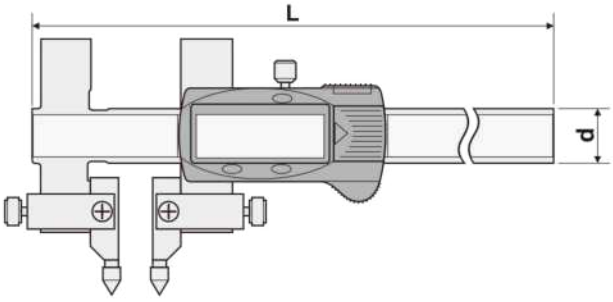

货 号 Code NO.	测量范围 Measuring Range mm	精度 Accuracy mm	L mm	d mm
118-412	0-200	±0.06	286	16
118-413	0-300	±0.06	400	17

F

测头类型

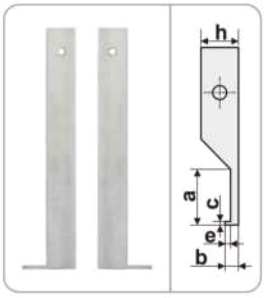

货 号 Code NO.	a mm	b mm	c mm	e mm	h mm
118-412-020A-01	12	2.5	0.4	1	8
118-412-020A-02	16	3.5	0.4	2	8
118-412-020A-03	25	7.5	0.6	5	8
118-412-020A-04	30	10	1	6.5	8
118-412-020A-05	80	22	1.5	10	12

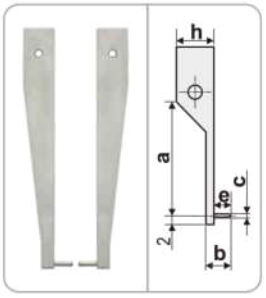

货 号 Code NO.	a mm	b mm	c mm	e mm	h mm
118-412-020C-01	70	12	Ø2	7	12
118-412-020C-02	70	12	Ø4	7	12

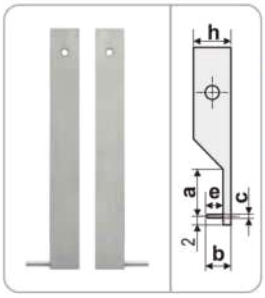

货 号 Code NO.	a mm	b mm	c mm	e mm	h mm
118-412-020B-01	20	5	Ø1	2	8
118-412-020B-02	40	10	Ø2	5	8
118-412-020B-03	80	22	Ø2	10	12

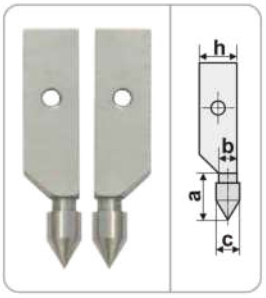

货 号 Code NO.	a mm	b mm	c mm	h mm
118-412-020E-01	10	4	Ø5	8
118-412-020E-02	20	4	Ø10	8
118-412-020E-03	25	8	Ø15	12

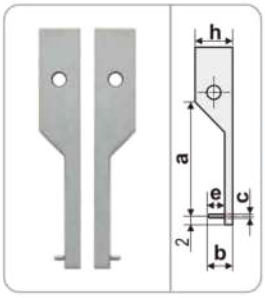

货 号 Code NO.	a mm	b mm	c mm	e mm	h mm
118-412-020D-01	70	12	Ø2	7	12
118-412-020D-02	70	12	Ø4	7	12

可换测头数显卡尺

Digital Caliper with Exchangeable Measuring Points

S/STL hardened　SPC 既强相口

分辨力:0.01mm
Resolution:0.01mm

主要特点:

- 配备多种可换测头，便换快速方便（需选购）
- 测量功能齐全，用于测内外沟槽、软质板厚、壁厚等尺寸，一尺多用
- 任意位置清零，便于相对测量与绝对测量转换
- 任意位置公制与英制转换

FEATURES

- Various exchangeable measuring points for option
- Used for ID, OD, Thickness measurements
- Zero-setting at any position, convenient for relative and absolute measure conversion
- Mm/inch conversion at any position

F

货 号 Code NO.	测量范围 Measuring Range mm	精度 Accuracy mm	L mm	a mm	b mm	c mm	d mm
115-441A	0-150	±0.04	250	45	7	12	16
115-442A	0-200	±0.04	310	85	10	12	16
115-443A	0-300	±0.05	410	100	15	12	16
115-445Z-A	0-500	±0.06	680	140	20	12	24

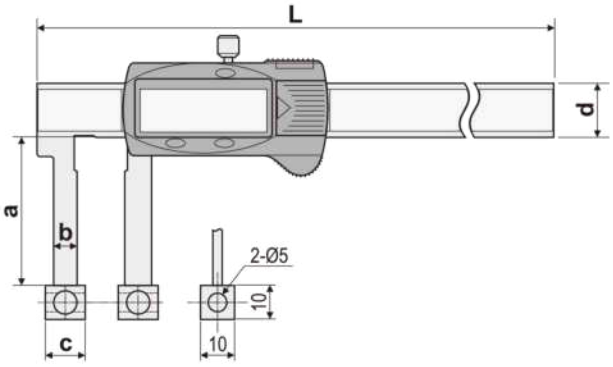

测头类型

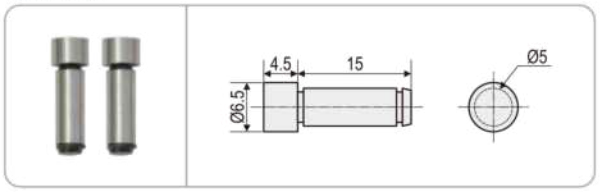

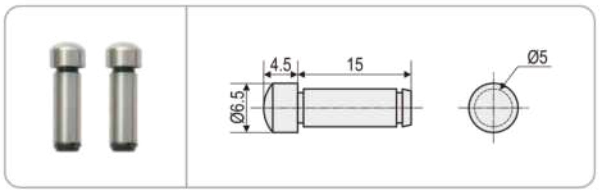

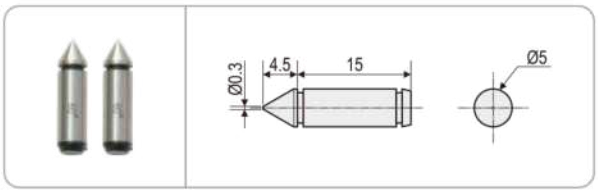

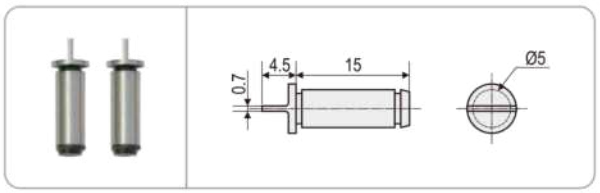

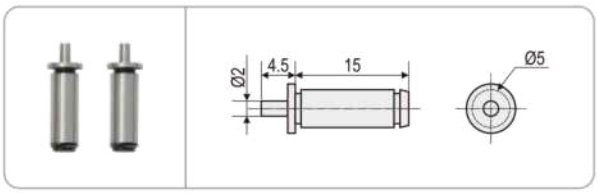

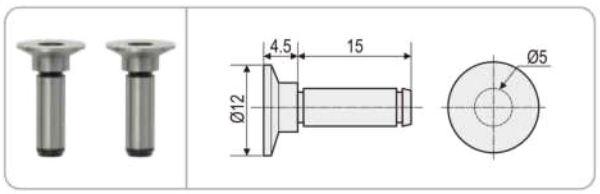

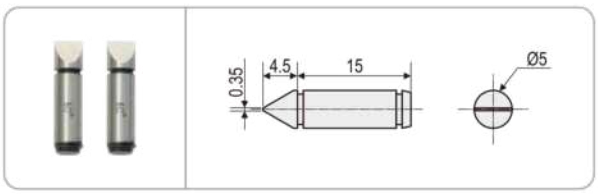

高低数显卡尺
Digital Caliper with High-low Lines

S/STL hardened | SPC 欧盟船口

分辨力:0.01mm
Resolution:0.01mm

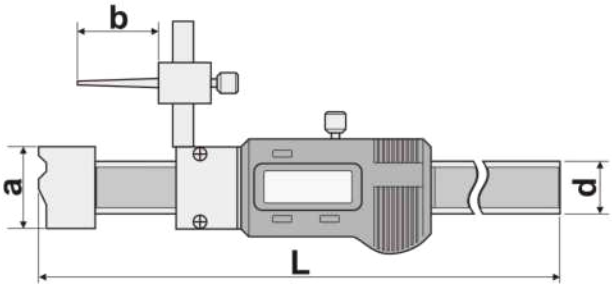

货号 Code NO.	测量范围 Measuring Range mm	精度 Accuracy mm	L mm	a mm	b mm	d mm
121-100T2	-10-30	± 0.02	132	20	21	13

F

分辨力:0.01mm
Resolution:0.01mm

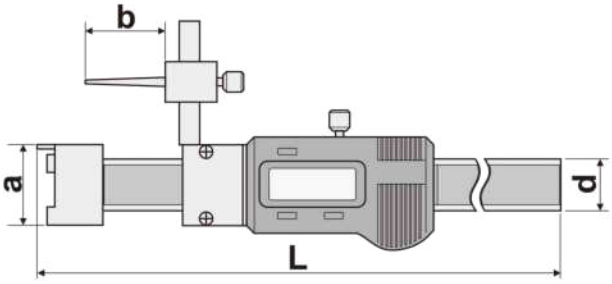

货号 Code NO.	测量范围 Measuring Range mm	精度 Accuracy mm	L mm	a mm	b mm	d mm
121-100T3	-10-30	± 0.02	133	25	21	13

主要特点:

- 专用于车灯灯罩测量，外形小巧便于使用
- 任意位置清零，便于相对测量与绝对测量转换
- 任意位置公制与英制转换

FEATURES

- Special design for lampshade measurement, easy to carry
- Zero-setting at any position, convenient for relative and absolute measure conversion
- Mm/inch conversion at any position

头盔壁厚数显卡尺
Digital Caliper with Half-round Jaws

S/STL hardened

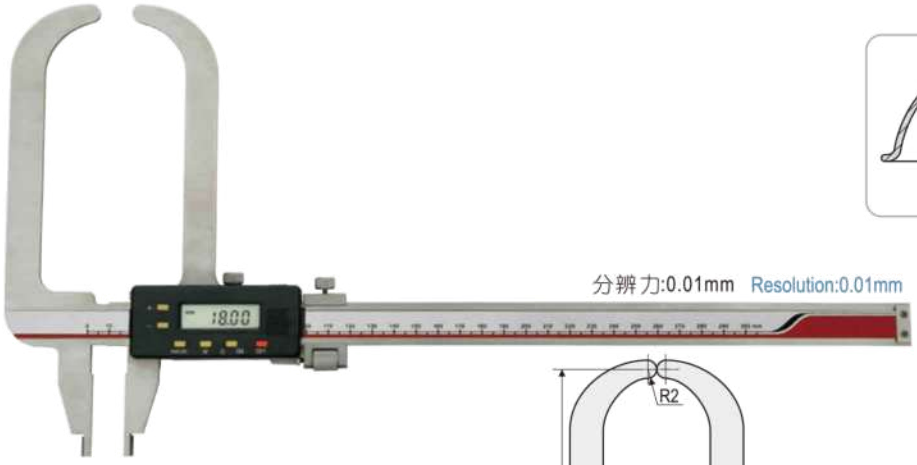

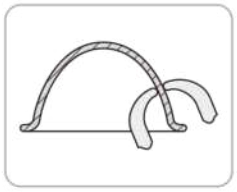

分辨力:0.01mm Resolution:0.01mm

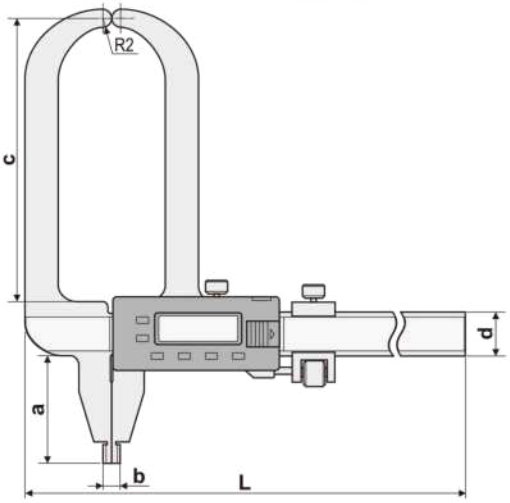

主要特点:
- 弧形上爪专用于测量各种头盔、球顶、弧形锅底的壁厚，使用方便
- 下爪可用于测量内外径
- 任意位置清零，便于相对测量与绝对测量转换
- 任意位置公制与英制转换
- 带预置功能，带数据保持功能，带微调装置

F

FEATURES
- Functions and features : easy used for helmet and arc-type thickness measurements
- Lower tips easy for ID measurements
- Zero-setting at any position, convenient for relative and absolute measure conversion
- Mm/inch conversion at any position
- With preset function, data hold and with fine-adjustment device

货 号 Code NO.	测量范围 Measuring Range mm	精度 Accuracy mm	L mm	a mm	b mm	c mm	d mm
111-502T2	0-300	±0.05	500	60	10	157.5	24

边心距数显卡尺
Center & Edge Distance Digital Caliper

分辨力:0.01mm
Resolution:0.01mm

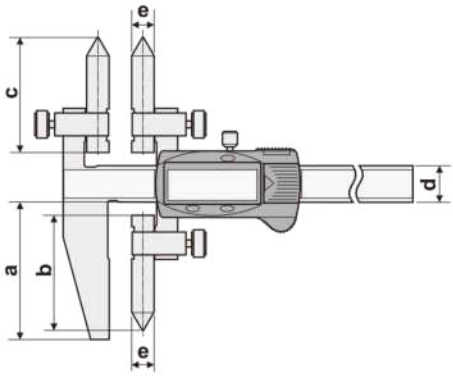

主要特点:
- 测量孔中心距、孔边距尺寸
- 圆锥测头

FEATURES
- For measuring hole Center-to-Center and Edge-to-Center distances
- Conical measuring poles

货 号 Code NO.	测量范围 Measuring Range mm	精度 Accuracy mm	a mm	b mm	c mm	d mm	e mm
119-201	上爪:10-150 下爪:5-150	±0.05	60	50	50	16	Ø10
119-202	上爪:10-200 下爪:5-200	±0.07	60	50	50	16	Ø10
119-203	上爪:10-300 下爪:5-300	±0.09	60	50	50	16	Ø10

键槽对称度数显卡尺
Keyway Symmetry Digital Caliper

S/STL hardened | SPC 数据接口

NEW

分辨力:0.01mm
Resolution:0.01mm

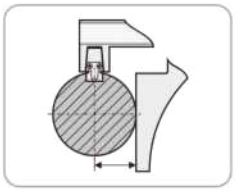

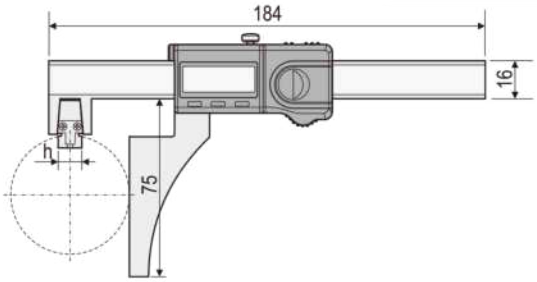

主要特点:

- 通过选配不同的定位块组合，可以实现测量范围：键槽宽度6mm-32mm，轴径18mm-20mm
- 可以简便直接地测量键槽的径向对称度，通过计算公式还可以测量键槽的长向对称度

FEATURES

- The measurement range can be achieved by selecting different position-ing block combinations: keyway width 6-32mm, shaft diameter 18-20mm
- The radial symmetry of the keyway can be measured simply and directly, and the longitudinal symmetry of the keyway can also be measured through the calculation formula

货 号 Code NO.	定位块组合货号 Positioning Block NO.	键槽宽度 Keyway Width h/mm	轴径 Shaft Diameter mm	精度 Accuracy mm
118-301A	118-301A-050-1	6	18-24	±0.05
	118-301A-050-2	8	24-30	±0.05
	118-301A-050-3	10	30-36	±0.05
	118-301A-050-4	12	36-42	±0.05
	118-301A-050-5	14	42-48	±0.05
	118-301A-050-6	16	45-55	±0.05
	118-301A-050-7	18	55-65	±0.05
	118-301A-050-8	20	65-75	±0.05
	118-301A-050-9	24	75-90	±0.05
	118-301A-050-10	28	90-105	±0.05
	118-301A-050-11	32	105-120	±0.05

F

划线用数显卡尺
Digital Caliper with Scribing Jaws

S/STL hardened | SPC 数据接口

分辨力:0.01mm
Resolution:0.01mm

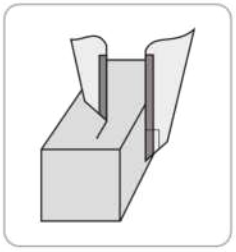

主要特点:

- 专用于划线，使用方便
- 划线爪镶耐磨硬质合金
- 任意位置清零，便于相对测量与绝对测量转换
- 任意位置公制与英制转换

FEATURES

- Used for measuring and scribing
- Carbide-tipped scriber
- Zero-setting at any position, convenient for relative and absolute measure conversion
- Mm/inch conversion at any position

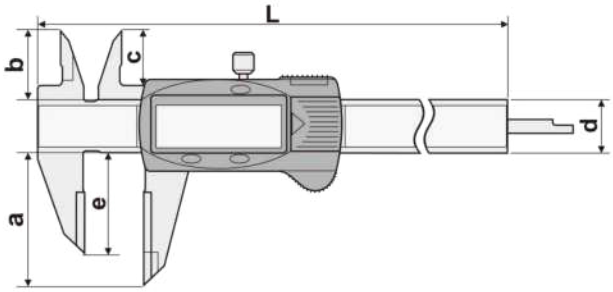

货 号 Code NO.	测量范围 Measuring Range mm	精度 Accuracy mm	L mm	a mm	b mm	c mm	d mm	e mm
111-251T	0-150	±0.03	236	40	21	16.5	16	30

游标楔形塞尺
Vernier Wedge-shape Feeler Gauge

S/STL hardened

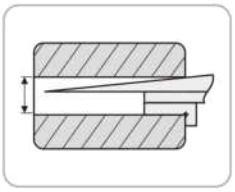

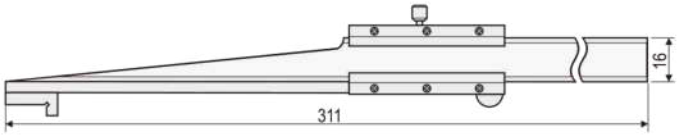

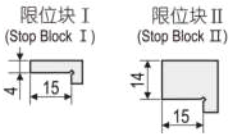

主要特点:
- 用于测量沟缝宽度尺寸

FEATURES
- Used for gaps width measurements

货 号 Code NO.	测量范围 Measuring Range mm	精度 Accuracy mm
041-210	0.2-10	± 0.03

增加限位块 Additional Stop Block	测量范围 Measuring Range mm
限位块 I(Stop Block I)	10-20
限位块 II(Stop Block II)	20-30

F

牙医专用游标卡尺
Special Vernier Caliper for Dentists Purpose

S/STL hardened

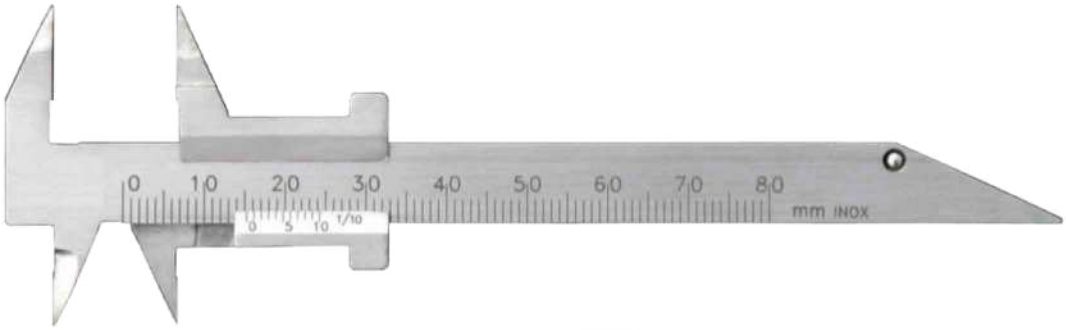

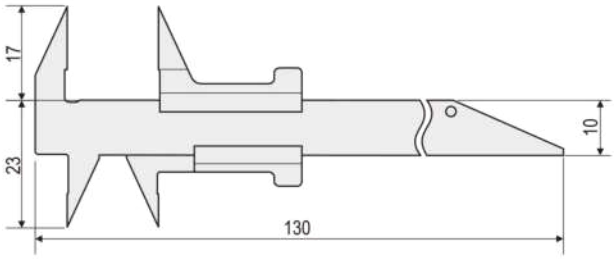

主要特点:
- 用于牙医学科
- 可用于非钢件的测量

FEATURES
- For dentist's purpose
- Used for measuring workpiece of non-stainless steel

货 号 Code NO.	测量范围 Measuring Range mm	分度值 Graduation mm	精度 Accuracy mm
149-210	0-70	0.1	± 0.1

齿厚游标卡尺
Vernier Gear Tooth Caliper

S/STL hardened

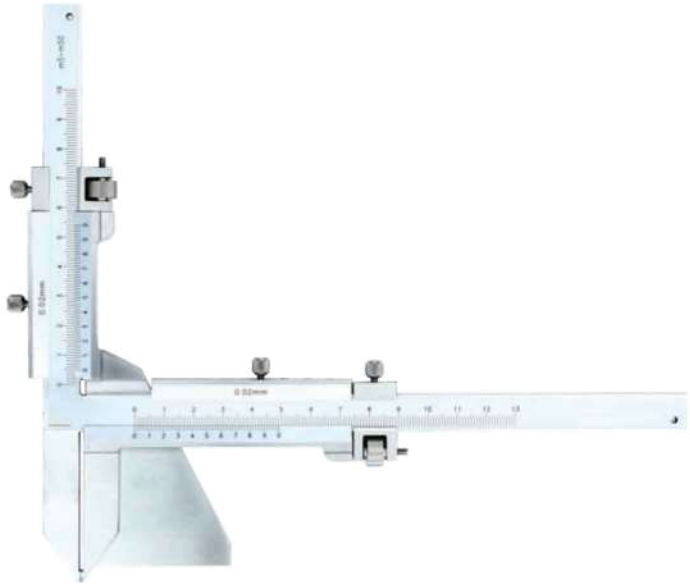

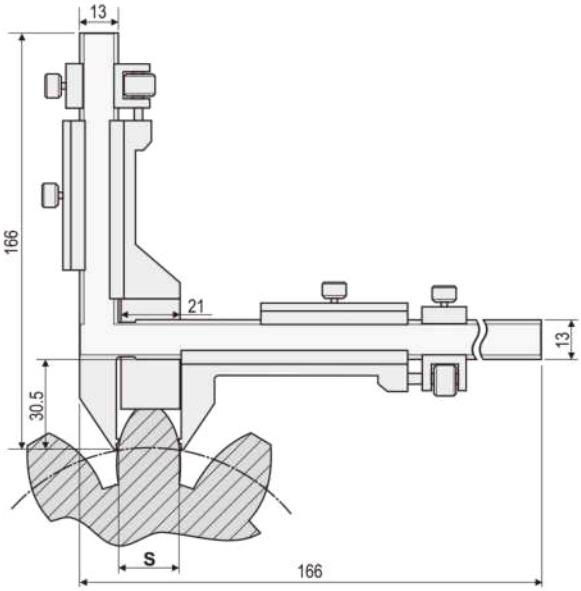

主要特点:
- 测量齿轮齿厚的尺寸

FEATURES
- Facilitate measurement of gear thickness

货 号 Code NO.	测量范围 Measuring Range mm	分度值 Graduation mm	精度 Accuracy mm
148-112	m1-m26	0.02	± 0.03
148-114	m5-m50	0.02	± 0.04
148-116K	m15-m55	0.02	± 0.04

F

油槽游标卡尺
Special Vernier Caliper for Seal Grooves

S/STL hardened

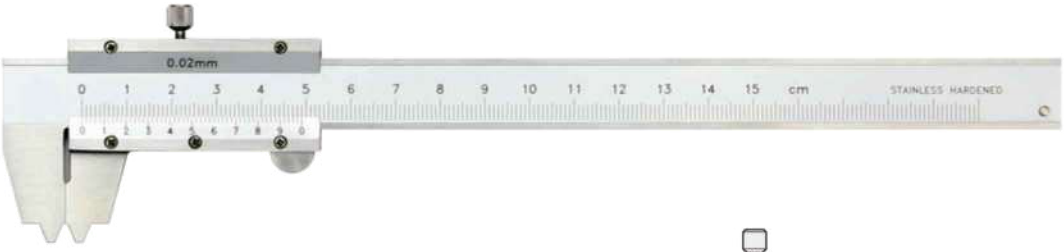

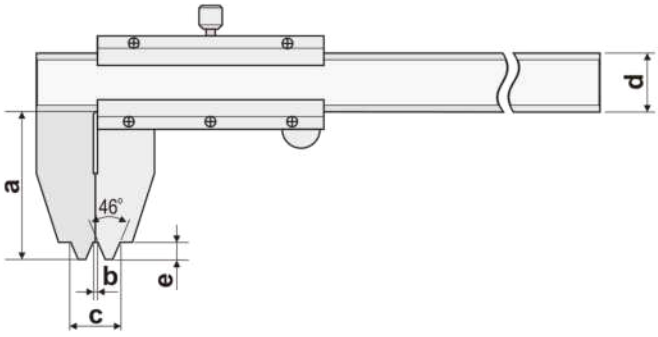

主要特点:
- 用于测量石油管道阀门法兰密封槽
- 可测量环槽内、外径尺寸
- 量爪角度：23°

FEATURES
- For measuring the seal groove in valve flange and pipe flange
- For measuring OD of the ring groove
- The jaws' angle is 23°

货 号 Code NO.	测量范围 Measuring Range mm	分度值 Graduation mm	精度 Accuracy mm	a mm	b mm	c mm	d mm	e mm
145-203KY	0-300	0.02	± 0.05	50	2	20	16	7
145-205KY	0-500	0.02	± 0.06	50	2	25	24	7

刹车片游标卡尺
Disc Brake Vernier Caliper

S/STL hardened

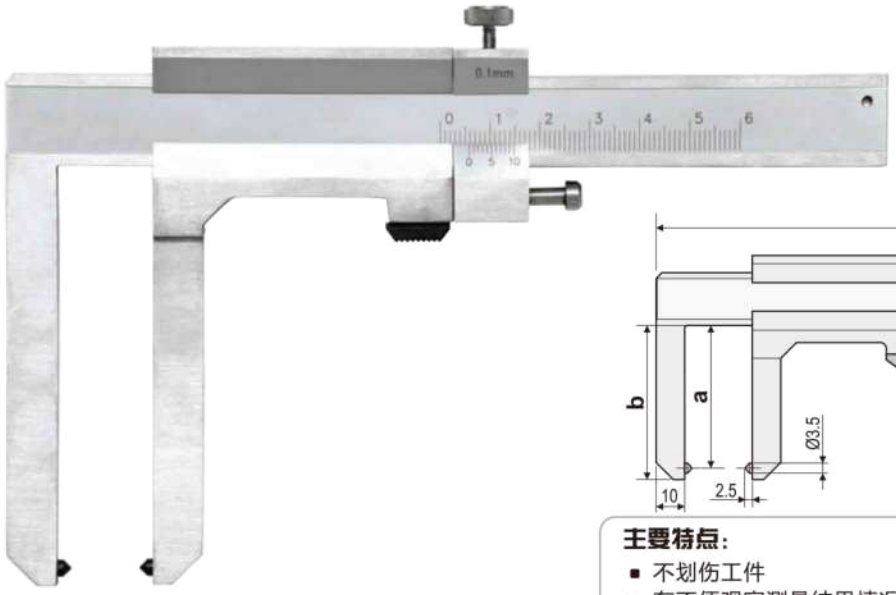

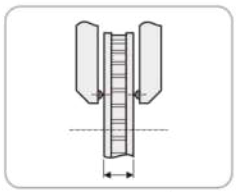

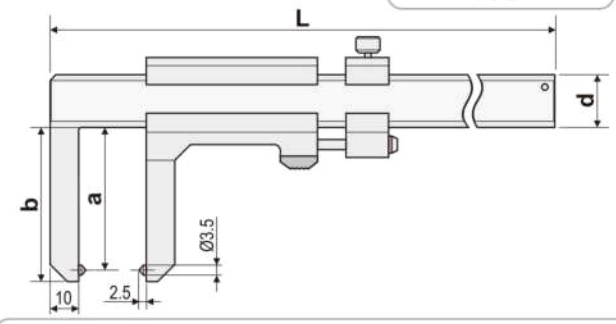

主要特点：
- 不划伤工件
- 在不便观察测量结果情况下，可保持测量数值

FEATURES
- It will not scratch any workpieces
- Measurement data can be hold when it's difficult to read

货 号 Code NO.	测量范围 Measuring Range mm	分度值 Graduation mm	精度 Accuracy mm	L mm	a mm	b mm	d mm
142-180	0-50	0.1	±0.1	175	50	53.5	18.5
142-180-1	0-50	0.1	±0.1	175	80	83.5	18.5
142-181	0-100	0.1	±0.1	225	120	123.5	18.5

F

开式刀头双内沟游标卡尺
Vernier Caliper with Knife-edged Measuring Faces for Inside Grooves

S/STL hardened

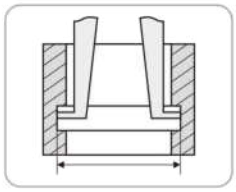

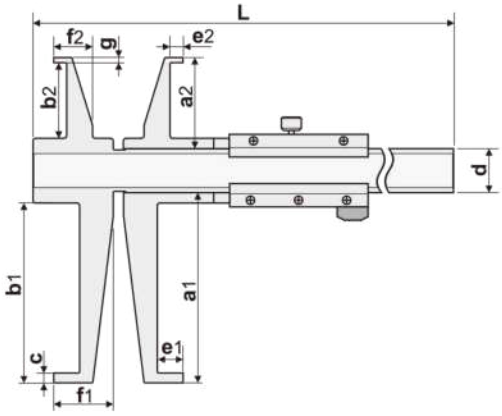

主要特点：
- 测头较薄，便于测量孔内较窄沟槽尺寸

FEATURES
- Facilitate measurement of a diameter of a narrow groove in a hole through thinner jaws

货 号 Code NO.	测量范围 Measuring Range mm	分度值 Graduation mm	精度 Accuracy mm	L mm	a1 mm	a2 mm	b1 mm	b2 mm	c mm	d mm	e1 mm	e2 mm	f1 mm	f2 mm	g mm
145-200AK	上爪:10-125 下爪:18-125	0.02	±0.03	230	73.5	35.2	70.5	29.2	2.9	16	5	4	17	11	2
145-202AK	上爪:10-150 下爪:18-150	0.02	±0.03	258	73.5	35.2	69.5	29.2	3.8	17	10	5	23	15	2
145-204AK	上爪:10-200 下爪:18-200	0.02	±0.03	309	73.5	35.2	69.5	29.2	3.8	17	10	5	23	15	2
145-206AK	上爪:10-300 下爪:18-300	0.02	±0.04	409	73.5	35.2	69.5	29.2	3.8	17	10	5	23	15	2

扁头内沟槽游标卡尺
Vernier Caliper with Flat Measuring Point for Inside Grooves

S/STL hardened

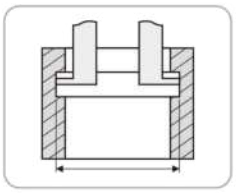

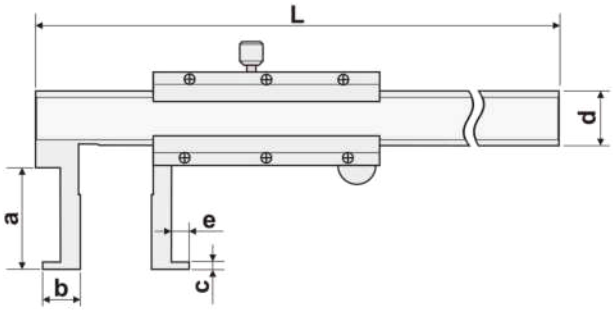

主要特点:
- 可测量较小孔内沟槽尺寸

FEATURES
- Facilitate measurement of a diameter of an inside groove in a smaller hole

货 号 Code NO.	测量范围 Measuring Range mm	分度值 Graduation mm	精度 Accuracy mm	L mm	a mm	b mm	c mm	d mm	e mm
145-221K	18-150	0.02	± 0.04	236	22	9	2	16	5
145-222K	25-200	0.02	± 0.04	286	40	12.5	2	16	5
145-223K	30-300	0.02	± 0.05	400	50	15	2	16	5
145-225K	40-500	0.02	± 0.06	680	90	20	2	20	5

F

扁头外沟槽游标卡尺
Vernier Caliper with Flat Measuring Points for Outside Grooves

S/STL hardened

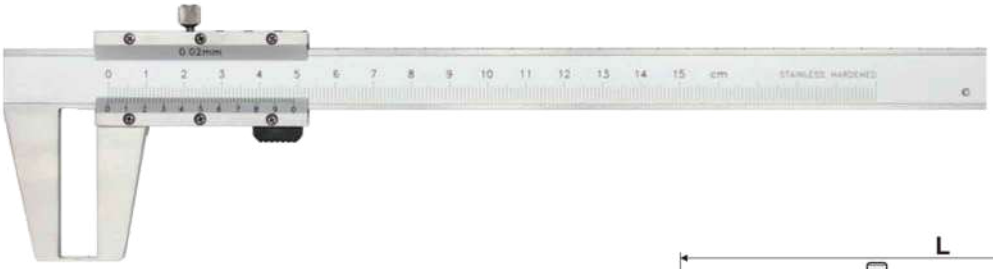

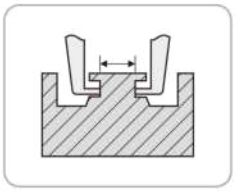

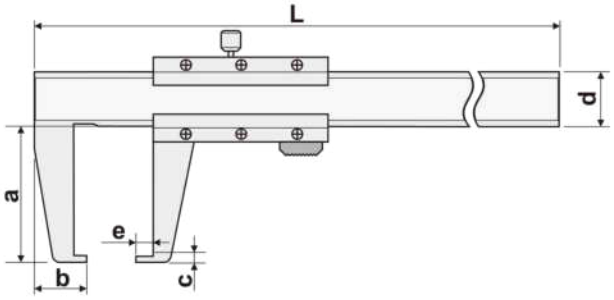

主要特点:
- 可从端部测量较大尺寸轴及零件表面沟槽直径

FEATURES
- Can measure the diameter of outside groove of work piece

货 号 Code NO.	测量范围 Measuring Range mm	分度值 Graduation mm	精度 Accuracy mm	L mm	a mm	b mm	c mm	d mm	e mm
144-201K	0-150	0.02	± 0.03	255	40	20	1	16	5
144-201-1K	0-150	0.02	± 0.03	255	70	22	2	16	7
144-202K	0-200	0.02	± 0.03	311	50	25	2	16	8
144-202-1K	0-200	0.02	± 0.03	311	80	25	2	16	8
144-203K	0-300	0.02	± 0.04	470	60	35	2.5	20	15
144-203-1K	0-300	0.02	± 0.04	470	100	35	2.5	20	15

开式沟槽宽游标卡尺
Vernier Caliper with Anvil for Measuring the Width of Grooves

S/STL hardened

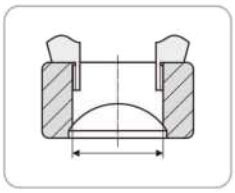

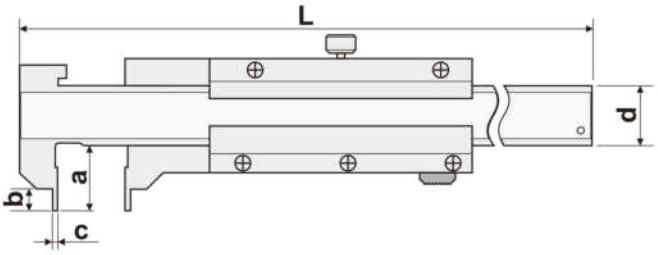

主要特点:
- 可用于测量孔中沟槽宽和沟槽位置尺寸

FEATURES
- Used for inside grooves' width measurements in deep bores

货 号 Code NO.	测量范围 Measuring Range mm	分度值 Graduation mm	精度 Accuracy mm	L mm	a mm	b mm	c mm	d mm
145-302K	4-150	0.02	±0.04	236	12	4	2	11

F

开式倒角游标卡尺
Vernier Caliper for Chamfer Measuring

S/STL hardened

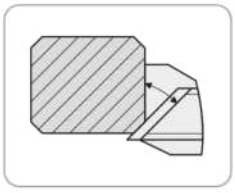

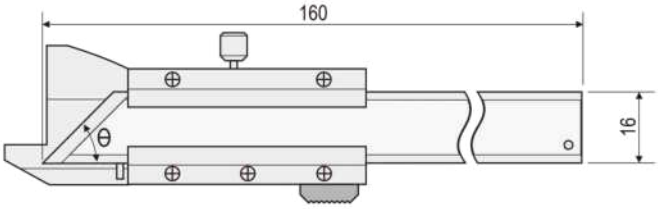

主要特点:
- 用于测量30°、45°、60°倒角尺寸

FEATURES
- Used for measuring the dimension of 30°/45°/60°chamfers

货 号 Code NO.	测量范围 Measuring Range mm	分度值 Graduation mm	精度 Accuracy mm	测量倒角角度 θ Angle of chamfering
149-220	0-8	0.02	±0.03	45°
149-220-1	0-8	0.02	±0.03	30°
149-220-2	0-8	0.02	±0.03	60°

游标焊缝尺
Vernier Welding Seam Gauge

S/STL hardened

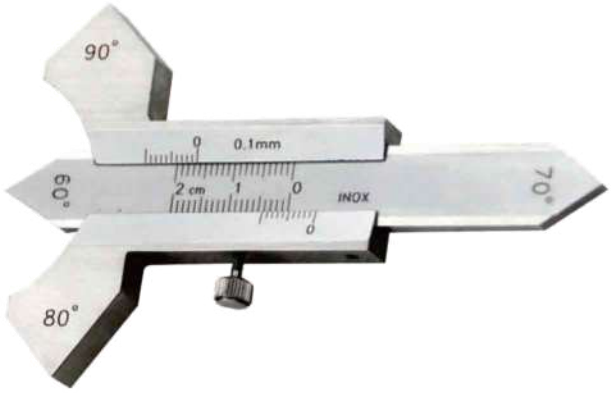

主要特点:
- 用于测量平焊缝、角焊缝的高度尺寸测量
- 有60°、70°、80°、90°四种角度样板
- 外形小巧便于携带

FEATURES
- Measuring the height of flat welds and angle welds
- With 60°、70°、80°、90° board
- Small size for easy carry

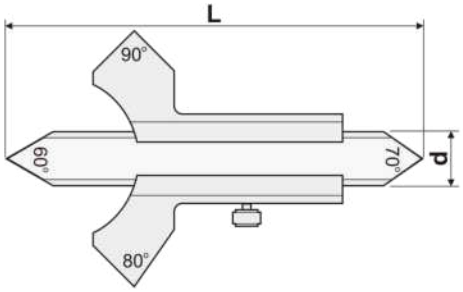

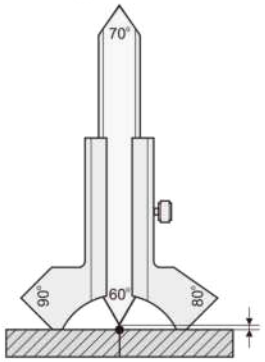

平焊缝测量 Flat Weld

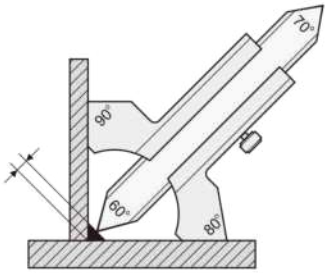

角焊缝测量Angle Welds

货 号 Code NO.	测量范围 Measuring Range mm	分度值 Graduation mm	精度 Accuracy mm	L mm	d mm
149-141	0-10	0.1	±0.1	100	13

F

高低游标卡尺
Vernier Caliper for High-low Line Measuring

S/STL hardened

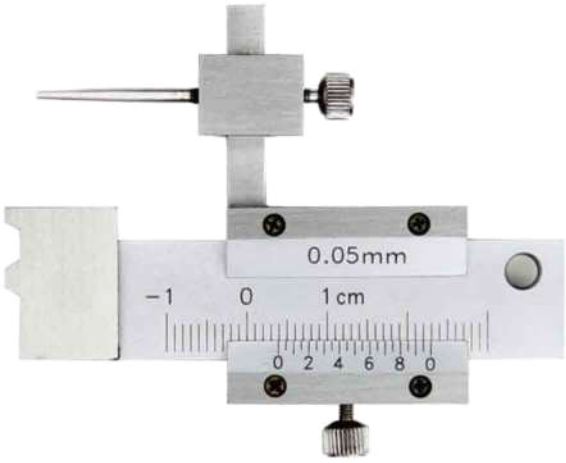

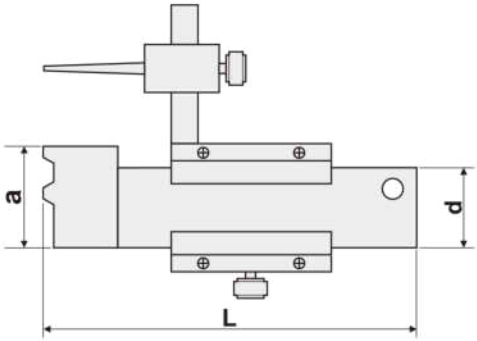

主要特点:
- 主要用于汽车整车、检具、模具、电器、灯具等，能方便快捷地测量产品之间高低（段差）尺寸

FEATURES
- Special for measuring the shade of car lamp, small size for easy use

货 号 Code NO.	测量范围 Measuring Range mm	分度值 Graduation mm	精度 Accuracy mm	L mm	a mm	d mm
149-231	-10-10	0.05	±0.05	70	19	15

奇数沟游标卡尺
Precision 3-point and 5-point Vernier Caliper

S/STL hardened

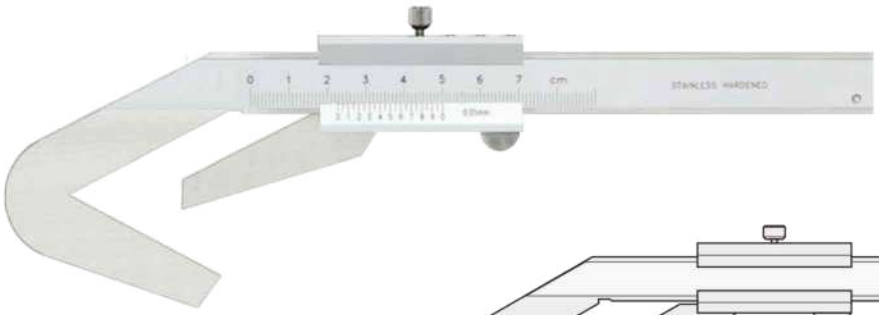

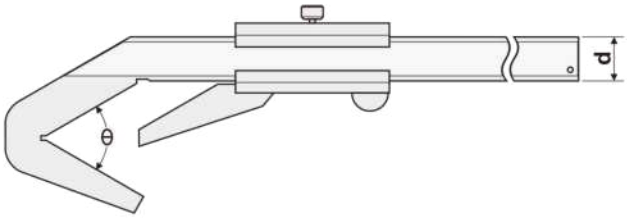

主要特点：
- 用于测量3沟、5沟的铣刀外径尺寸

FEATURES
- Used for measuring the OD of milling cutter with Three or Five cutting edges

货 号 Code NO.	测量范围 Measuring Range mm	分度值 Graduation mm	精度 Accuracy mm	沟数 3-point And 5-point	θ	d mm
142-510	4-40	0.05	± 0.05	3	60°	16
142-520	1-40	0.05	± 0.05	5	108°	16

F

T 型划线游标卡尺
T Type Scribing Vernier Caliper

S/STL hardened

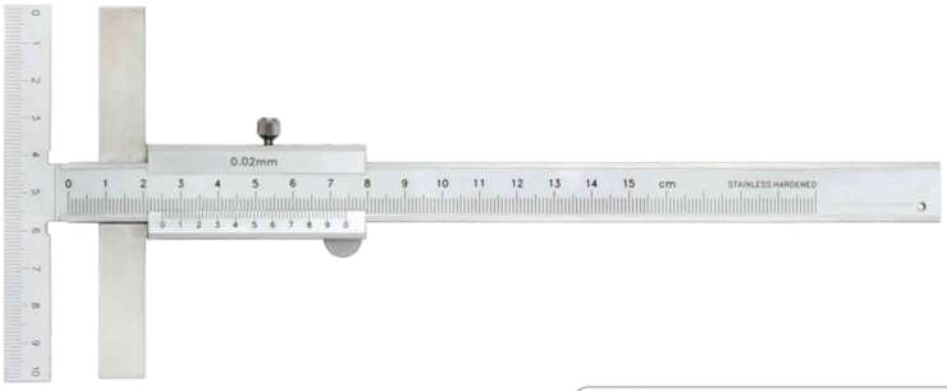

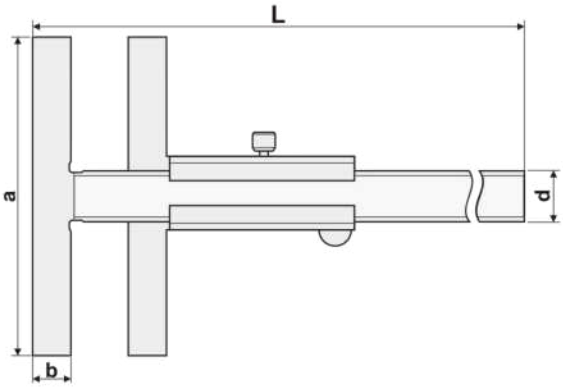

主要特点：
- 便于在工件上划线
- 可测量深度尺寸

FEATURES
- Easy for scribing
- For depth measuring

货 号 Code NO.	测量范围 Measuring Range mm	分度值 Graduation mm	精度 Accuracy mm	L mm	a mm	b mm	d mm
159-302	0-150	0.02	± 0.04	250	100	12	16
159-304	0-200	0.02	± 0.04	300	100	12	16
159-306	0-300	0.02	± 0.04	400	100	12	16

L 型划线游标卡尺
L Type Scribing Vernier Caliper

S/STL hardened

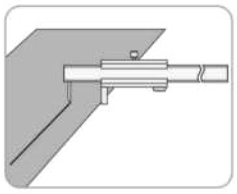

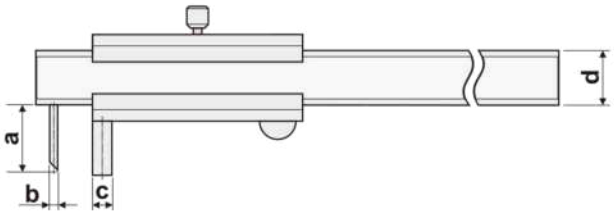

主要特点:
- 便于在工件上划平行线
- 测量管壁厚尺寸

FEATURES
- Easy for scribing parallel lines on work piece
- For measuring tube thickness

货 号 Code NO.	测量范围 Measuring Range mm	分度值 Graduation mm	精度 Accuracy mm	a mm	b mm	c mm	d mm
146-105	0-200	0.1	± 0.1	16	Ø2	Ø8	16

F

双宽量面游标卡尺
Vernier Caliper with Large-sized Measuring Faces

S/STL hardened

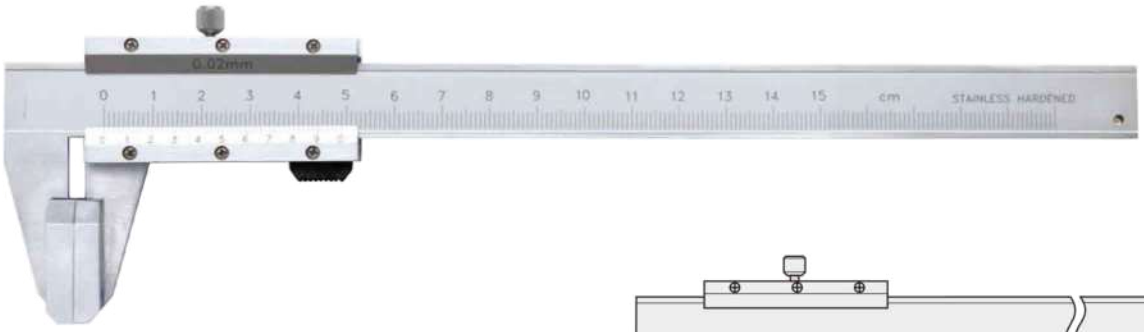

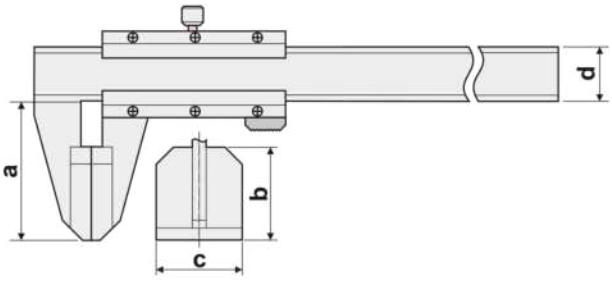

主要特点:
- 用于测量跨度较大的测量面，如钢丝绳等
- 用于测量表面受力较小的测量物，如橡胶、海绵等

FEATURES
- Used for measuring workpiece with wide surface, like wire rope
- Used for measuring workpiece with soft surface, like foam and rubber

货 号 Code NO.	测量范围 Measuring Range mm	分度值 Graduation mm	精度 Accuracy mm	a mm	b mm	c mm	d mm	e mm
149-522	0-150	0.02	± 0.04	40	27	25	16	6
149-524	0-200	0.02	± 0.04	40	27	25	16	6

边心距游标卡尺
Center & Edge Distance Vernier Caliper

S/STL hardened

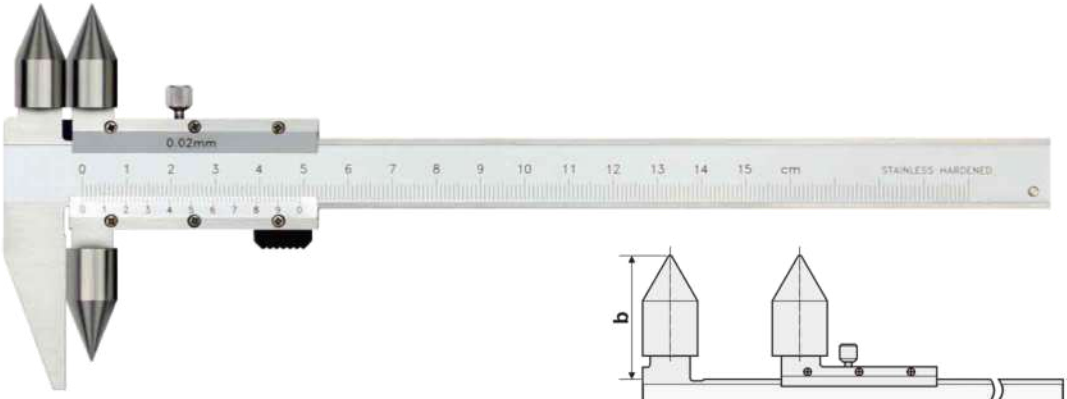

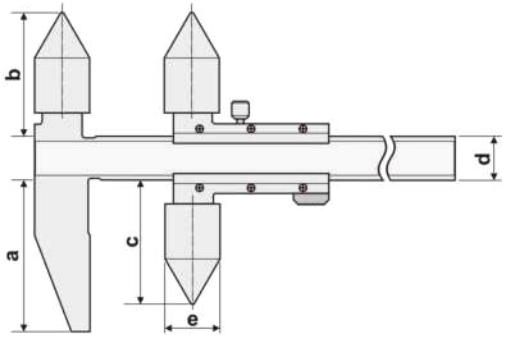

主要特点:
- 测量孔中心距、孔边距尺寸
- 圆锥测头

FEATURES
- For measuring hole Center-to-Center and Edge-to-Center distances
- Conical measuring poles

货 号 Code NO.	测量范围 Measuring Range mm	分度值 Graduation mm	精度 Accuracy mm	a mm	b mm	c mm	d mm	e mm
149-252K	10-150	0.02	± 0.04	55	45	45	16	Ø20
149-254K	10-200	0.02	± 0.04	55	45	45	16	Ø20
149-256K	10-300	0.02	± 0.05	55	45	45	16	Ø20

F

游标划线圆规
Vernier Caliper for Scribing

S/STL hardened

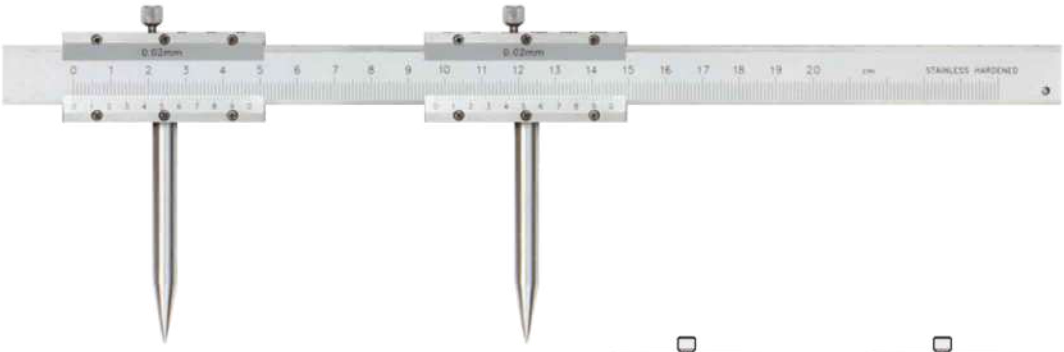

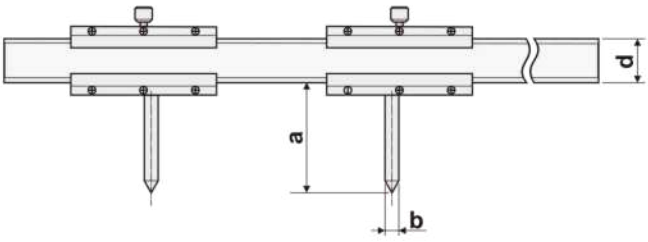

主要特点:
- 便于在工件上划圆弧、线段
- 测量两孔中心距

FEATURES
- Easy for scribing arc and line
- Used for measuring center distance of two holes

货 号 Code NO.	测量范围 Measuring Range mm	分度值 Graduation mm	精度 Accuracy mm	a mm	b mm	d mm
159-354K	30-200	0.02	± 0.04	40	Ø5	16
159-358K	40-500	0.02	± 0.06	40	Ø5	24
159-362K	40-1000	0.02	± 0.08	80	Ø10	31

细尖爪带表卡尺
Dial Caliper with Narrow-tipped Jaws

S/STL hardened

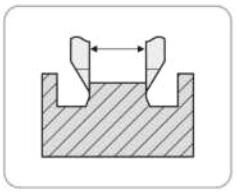

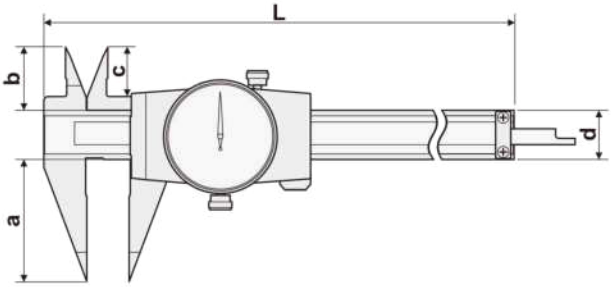

主要特点:
- 测量窄小空间的局部尺寸
- 读数清晰、直观
- 刻度盘位置可调整，并借助锁紧螺钉紧固

FEATURES
- The narrow pointed jaws used for small grooves measurements
- Easy to read
- The adjustable dial face can be fastened by a clamping screw

货 号 Code NO.	测量范围 Measuring Range mm	分度值 Graduation mm	精度 Accuracy mm	示值/周 Range/rev.	L mm	a mm	b mm	c mm	d mm
171-732	0-150	0.02	±0.04	2	236	40	21	16.5	16
171-734	0-200	0.02	±0.04	2	286	50	24	19.5	16
171-736	0-300	0.02	±0.05	2	400	60	25	18.5	17

F

刀头双内沟带表卡尺
Double Inside Groove Dial Caliper with Knife-edged Measuring Faces

S/STL hardened

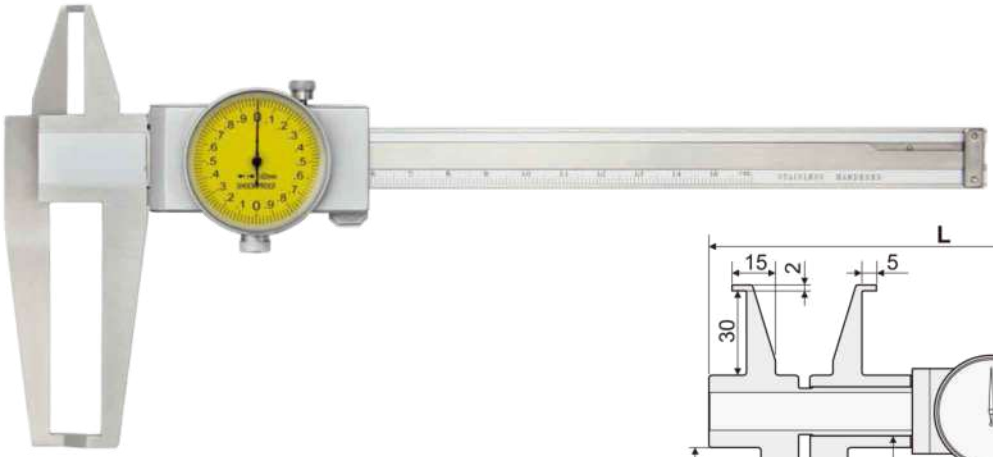

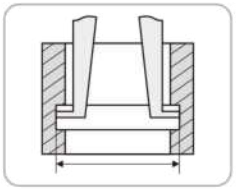

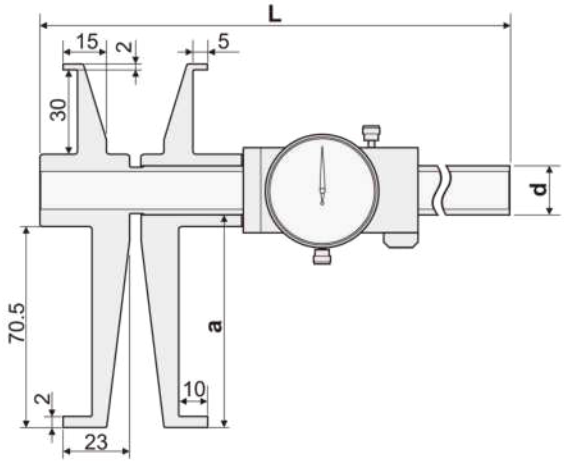

主要特点:
- 便于测量小孔内的内沟槽尺寸
- 读数清晰、直观
- 刻度盘位置可调整，并借助锁紧螺钉紧固

FEATURES
- Used for measuring the inside groove in small hole
- Easy to read
- The adjustable dial face can be fastened by a clamping screw

货 号 Code NO.	测量范围 Measuring Range mm	分度值 Graduation mm	精度 Accuracy mm	示值/周 Range/rev.	L mm	a mm	d mm
175-832	上爪:10-150 下爪:18-150	0.02	±0.03	2	244.5	75	16
175-834	上爪:10-200 下爪:18-200	0.02	±0.03	2	294.5	75	16
175-836	上爪:10-300 下爪:18-300	0.02	±0.04	2	407	77	17

长爪内径带表卡尺
Dial Caliper with Long Internal Measuring Jaws

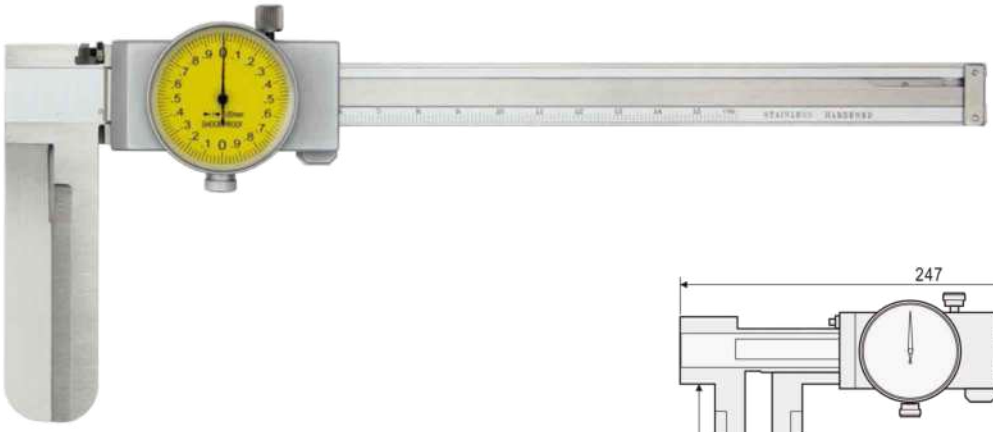

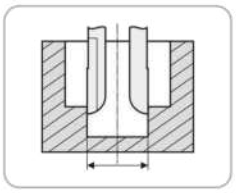

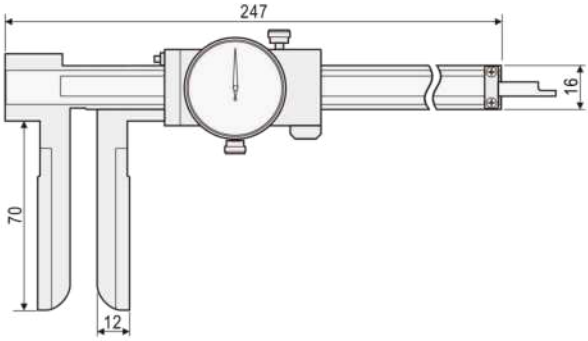

主要特点:
- 可测量阶梯深孔直径
- 读数清晰、直观
- 刻度盘位置可调整，并借助锁紧螺钉紧固

FEATURES
- Use for measuring diameter of step deep hole
- Easy to read
- The adjustable dial face can be fastened by a clamping screw

货 号 Code NO.	测量范围 Measuring Range mm	分度值 Graduation mm	精度 Accuracy mm	示值/周 Range/rev.
173-132	12-150	0.02	± 0.05	2

F

特殊壁厚带表卡尺
Dial Caliper with Special Measuring Jaws for Tube Thickness

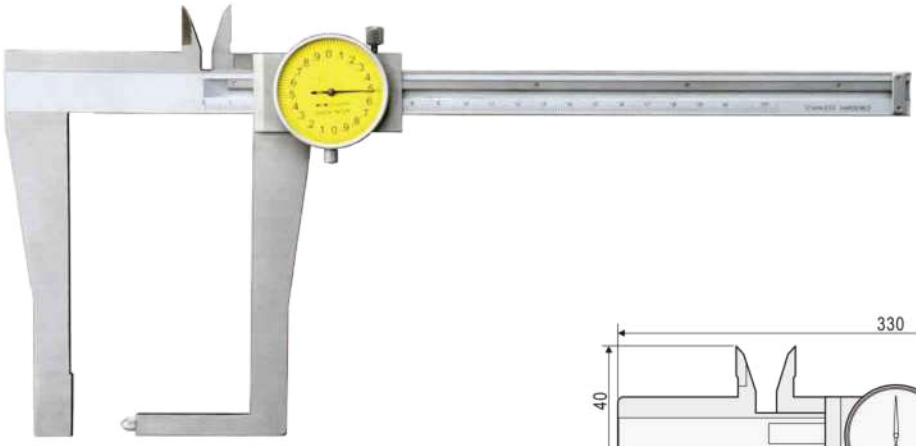

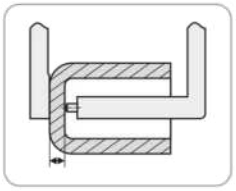

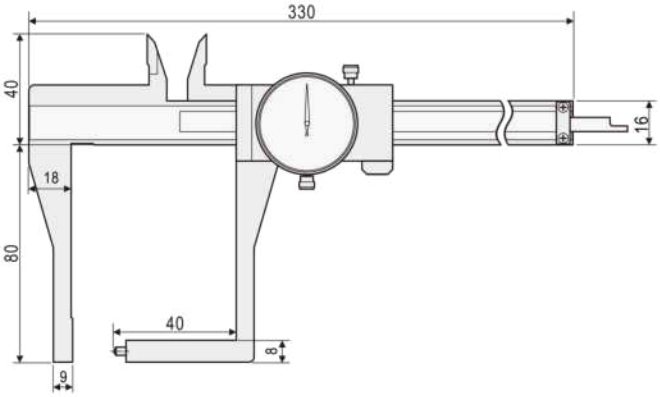

主要特点:
- 可测量一端面到另一沟槽的尺寸
- 测量大管件壁厚
- 读数清晰、直观
- 刻度盘位置可调整，并借助锁紧螺钉紧固

FEATURES
- For measuring from one end to the other end of groove
- For measuring tube thickness of big workpiece
- Easy to read
- The adjustable dial face can be fastened by a clamping screw

货 号 Code NO.	测量范围 Measuring Range mm	分度值 Graduation mm	精度 Accuracy mm	示值/周 Range/rev.
174-144A	0-200	0.02	± 0.05	2

扁头内沟槽带表卡尺

Dial Caliper with Flat Measuring Points for Inside Grooves

S/STL hardened

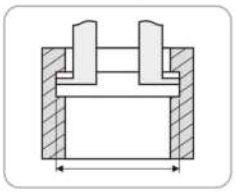

主要特点：

- 测头较薄，便于测量孔内较窄沟槽尺寸
- 读数清晰、直观
- 刻度盘位置可调整，并借助锁紧螺钉紧固

FEATURES

- With thin measuring heads, easy to measure the narrow groove dimensions of a hole
- Easy to read
- The adjustable dial face can be fastened by a clamping screw

货 号 Code NO.	测量范围 Measuring Range mm	分度值 Graduation mm	精度 Accuracy mm	示值/周 Range/rev.	L mm	a mm	b mm	c mm	d mm	e mm	f mm
175-132-0	20-150	0.02	± 0.04	2	236	40	34	1	16	3	10
175-132	25-150	0.02	± 0.04	2	236	50	44	1.5	16	5	12.5
175-134	20-200	0.02	± 0.04	2	286	40	34	1.5	16	3	10
175-134-1	25-200	0.02	± 0.04	2	286	50	44	1.5	16	5	12.5
175-134-2	30-200	0.02	± 0.04	2	286	60	54	1.5	16	6	15

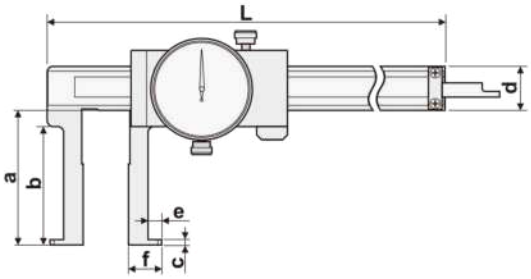

F

扁头外沟槽带表卡尺

Dial Caliper with Flat Measuring Points for Outside Grooves

S/STL hardened

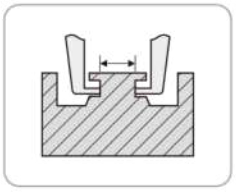

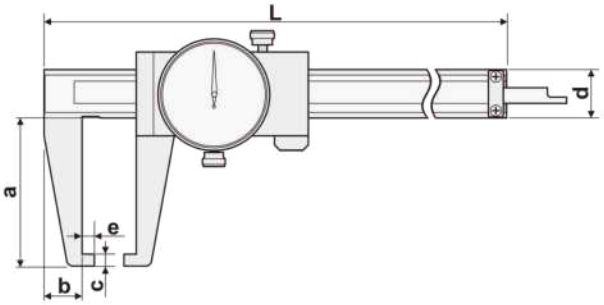

主要特点：

- 可从端部测量轴尺寸及零件表面沟槽直径
- 读数清晰、直观
- 刻度盘位置可调整，并借助锁紧螺钉紧固

FEATURES

- For measuring the diameter of outside groove of a workplace
- Easy to read
- The adjustable dial face can be fastened by a clamping screw

货 号 Code NO.	测量范围 Measuring Range mm	分度值 Graduation mm	精度 Accuracy mm	示值/周 Range/rev.	L mm	a mm	b mm	c mm	d mm	e mm
174-132-0	0-150	0.02	± 0.04	2	247	40	13	2	16	5
174-132	0-150	0.02	± 0.04	2	247	50	13	2	16	5
174-134-1	0-200	0.02	± 0.04	2	297	60	13	2	16	5

圆柱头内沟槽带表卡尺

Dial Caliper with Round Measuring Points for Inside Grooves

S/STL hardened

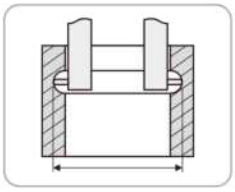

主要特点:

- 测头较长，便于测量孔内较深的沟槽直径
- 读数清晰、直观
- 刻度盘位置可调整，并借助锁紧螺钉紧固

FEATURES

- With long measuring heads, easy to measure the deep groove dimensions in a hole
- Easy to read
- The adjustable dial face can be fastened by a clamping screw

货 号 Code NO.	测量范围 Measuring Range mm	分度值 Graduation mm	精度 Accuracy mm	示值/周 Range/rev.	L mm	a mm	b mm	c mm	d mm	e mm	f mm
175-332	20-150	0.02	±0.04	2	236	34	3	7	16	3	Ø2
175-332-0	20-150	0.02	±0.04	2	236	44	3	8.5	16	4	Ø2
175-334	20-200	0.02	±0.04	2	286	35.5	3	7	16	3	Ø3
175-334-1	25-200	0.02	±0.04	2	286	45.5	3	8.5	16	4	Ø3
175-334-2	30-200	0.02	±0.04	2	286	55.5	3	9	16	5	Ø3
175-336	30-300	0.02	±0.05	2	400	43.5	3	10	17	5	Ø3
175-336-1	30-300	0.02	±0.05	2	400	53.5	3	10	17	5	Ø3
175-336-2	40-300	0.02	±0.05	2	400	63.5	3	15	17	5	Ø3
175-336-3	40-300	0.02	±0.05	2	400	73.5	3	15	17	5	Ø3
175-336-4	50-300	0.02	±0.05	2	400	83.5	3	15	17	10	Ø3

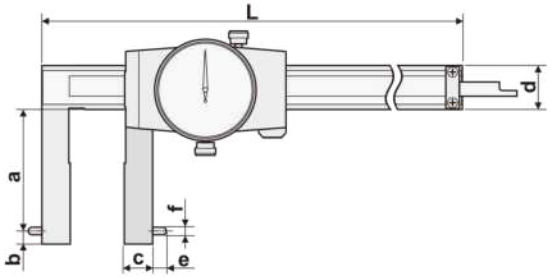

F

圆柱头外沟槽带表卡尺

Dial Caliper with Round Measuring Points for Outside Grooves

S/STL hardened

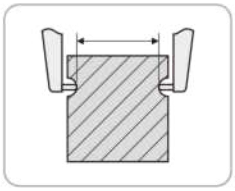

主要特点:

- 可测量沟槽或弯曲表面相关尺寸
- 读数清晰、直观
- 刻度盘位置可调整，并借助锁紧螺钉紧固

FEATURES

- For measuring groove or arch
- Easy to read
- The adjustable dial face can be fastened by a clamping screw

货 号 Code NO.	测量范围 Measuring Range mm	分度值 Graduation mm	精度 Accuracy mm	示值/周 Range/rev.	L mm	a mm	b mm	c mm	d mm	e mm	f mm
174-332	0-150	0.02	±0.04	2	242	40	3	10	16	5	Ø2
174-334	0-200	0.02	±0.04	2	306	50	3	14	16	10	Ø2.5
174-334-1	0-200	0.02	±0.04	2	306	60	3	14	16	10	Ø2.5

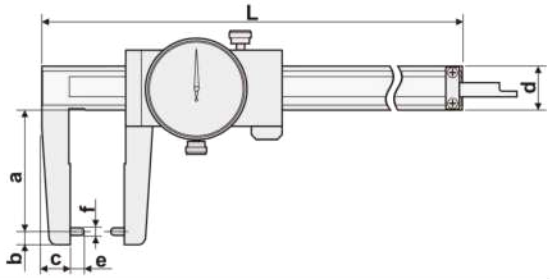

刀头内沟槽带表卡尺

Dial Caliper with Knife-edged Measuring Points for Inside Grooves

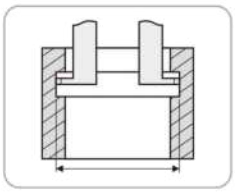

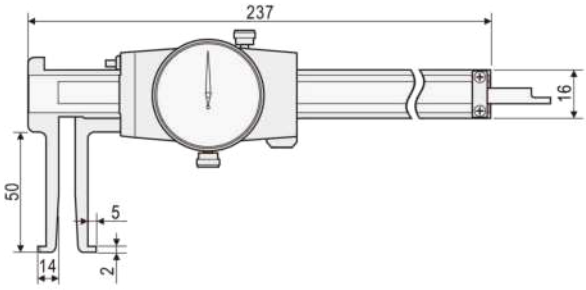

主要特点：

- 测头较薄，便于测量孔内较窄沟槽尺寸
- 读数清晰、直观
- 刻度盘位置可调整，并借助锁紧螺钉紧固

FEATURES

- With thin measuring heads, easy to measure the narrow groove dimensions of a hole
- Easy to read
- The adjustable dial face can be fastened by a clamping screw

货 号 Code NO.	测量范围 Measuring Range mm	分度值 Graduation mm	精度 Accuracy mm	示值/周 Range/rev.
175-632	16-150	0.02	± 0.04	2

F

伸缩爪带表卡尺

Dial Caliper with an Adjustable Measuring Jaw

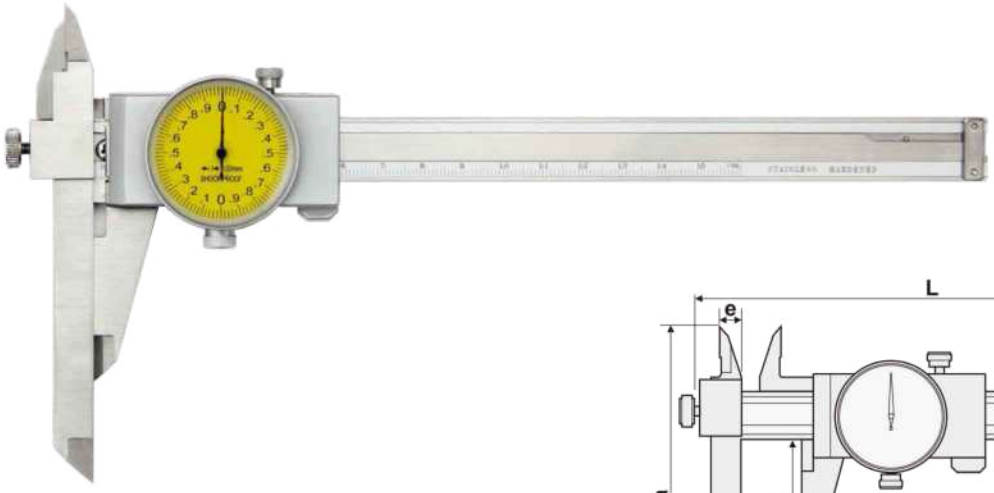

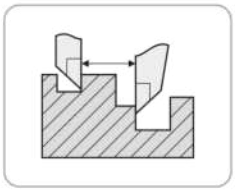

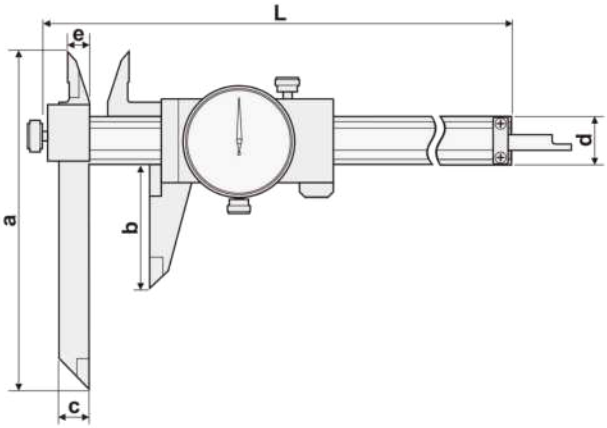

主要特点：

- 尺身爪可伸缩移动，可测量不等高平面的距离
- 读数清晰、直观
- 刻度盘位置可调整，并借助锁紧螺钉紧固

FEATURES

- Main scale jaw can be slid up and down to facilitate measurement of stepped sections
- Easy to read
- The adjustable dial face can be fastened by a clamping screw

货 号 Code NO.	测量范围 Measuring Range mm	分度值 Graduation mm	精度 Accuracy mm	示值/周 Range/rev.	L mm	a mm	b mm	c mm	d mm	e mm
177-132	0-150	0.02	± 0.04	2	240	110	40	10	16	7
177-134	0-200	0.02	± 0.05	2	290	120	50	10	16	7

HAFFMAN
High Precision Tools
让测量更简单

G

千分尺类
MICROMETERS







诚信为本·科技立业
SINCERITY & TECHNOLOGY

IP65 外径数显千分尺

Digital Micrometer IP65 Class

GB/T | S/STL hardened | SPC 数据接口

分辨力:0.001mm
Resolution:0.001mm

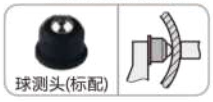

主要特点:

- 带数据输出接口(在使用数据接口时将达不到IP65防护等级)
- 绝对、相对测量模式转换
- 数据置零、数据保持、数据预置功能
- 内置式限力装置，确保精确的重复读数
- 硬质合金量面，保证设备持久的稳定性

FEATURES

- Data output port (IP65 protection is unavailable on data transmission)
- Relative and absolute measure conversion
- Zero-setting, data-hold, data preset functions
- Built-in force limiting device ensures accurate repeat reading
- Cemented carbide measuring surface ensures the constant stabilization of the equipment

货 号 Code NO.	测量范围 Measuring Range mm	精度 Accuracy mm	L mm	a mm	b mm	c mm	d mm
211-701	0-25	0.002	33	25	7	45.5	68
211-702	25-50	0.002	58	32.5	7	45.5	68
211-703	50-75	0.003	83	47.5	7	45.5	68
211-704	75-100	0.003	108	57	7	45.5	68
211-705	100-125	0.003	131	67	10	45.5	68
211-706	125-150	0.003	156	79	10	45.5	68
211-707	150-175	0.004	181	91.5	10	45.5	68
211-708	175-200	0.004	206	104	10	45.5	68
211-709	200-225	0.004	231	121	10	45.5	68
211-710	225-250	0.004	256	132	10	45.5	68
211-711	250-275	0.005	281	143	10	45.5	68
211-712	275-300	0.005	306	157.5	10	45.5	68

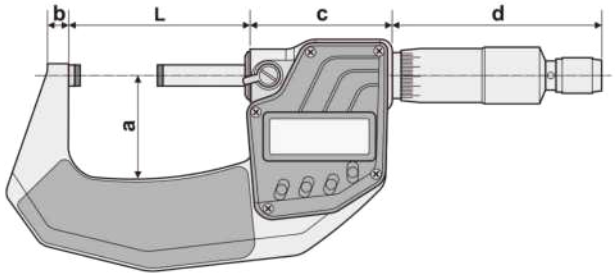

备注：蓝牙千分尺请转到P150页数据管理解决方案了解咨询。

G

外径数显千分尺
Outside Digital Micrometer

GB/T | S/STL hardened | SPC 数据接口

分辨力:0.001mm
Resolution:0.001mm

货 号 Code NO.	测量范围 Measuring Range mm	精度 Accuracy mm	L mm	a mm	b mm	c mm	d mm
211-101F	0-25	0.002	31	25	7	40	68
211-102F	25-50	0.002	56	35	7	40	68
211-103F	50-75	0.003	81	45	7	40	68
211-104F	75-100	0.003	106	55	7	40	68
211-105D	100-125	0.003	131	67	10	40	68
211-106D	125-150	0.003	156	79	10	40	68
211-107D	150-175	0.004	181	91.5	10	40	68
211-108D	175-200	0.004	206	104	10	40	68
211-109D	200-225	0.004	231	121	10	40	68
211-110D	225-250	0.004	256	132	10	40	68
211-111D	250-275	0.005	281	143	10	40	68
211-112D	275-300	0.005	306	157.5	10	40	68

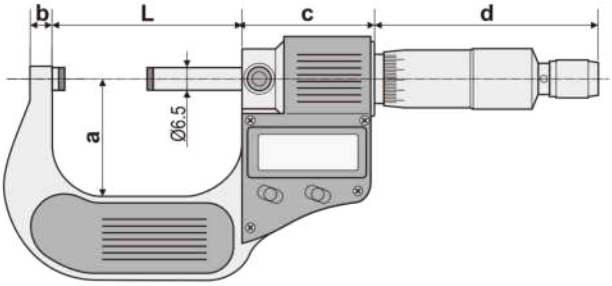

G

211-561

分辨力:0.001mm
Resolution:0.001mm

货 号 Code NO.	测量范围 Measuring Range mm	精度 Accuracy mm	L mm	a mm	b mm	c mm
211-561	0-25	0.002	31	24	6.5	110
211-571	0-25	0.002	31	24	6.5	110
211-572	25-50	0.002	56	32	6.5	110
211-573	50-75	0.003	81	45	6.5	110
211-574	75-100	0.003	106	57	6.5	110

211-571

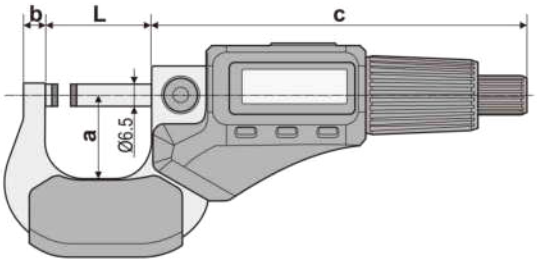

主要特点:

- 绝对、相对测量模式转换
- 数据置零、数据保持、数据预置功能
- 内置式限力装置，确保精确的重复读数
- 硬质合金量面，保证设备持久的稳定性

FEATURES

- Relative and absolute measure conversion
- Zero-setting, data-hold, data preset functions
- Built-in force limiting device ensures accurate repeat reading
- Cemented carbide measuring surface ensures the constant stabilization of the equipment

外径千分尺
Outside Micrometer

GB/T | S/STL hardened

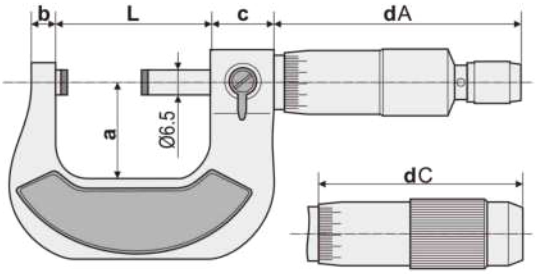

货 号 Code NO.	货 号 Code NO.	测量范围 Measuring Range mm	分度值 Graduation mm	精度 Accuracy mm	L mm	a mm	b mm	c mm	dA mm	dC mm
261-101A	261-101C	0-25	0.01	0.004	31	24	7	17	68	56
261-102A	261-102C	25-50	0.01	0.004	56	32	10	17	68	56
261-103A	261-103C	50-75	0.01	0.005	81	45	10	17	68	56
261-104A	261-104C	75-100	0.01	0.005	106	57	10	17	68	56

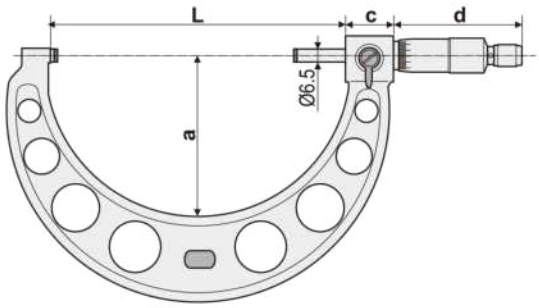

货 号 Code NO.	测量范围 Measuring Range mm	分度值 Graduation mm	精度 Accuracy mm	L mm	a mm	c mm	d mm
261-101D	0-25	0.01	0.004	31	27	17	68
261-102D	25-50	0.01	0.004	56	42	17	68
261-103D	50-75	0.01	0.005	81	54	17	68
261-104D	75-100	0.01	0.005	106	64	17	68
261-105D	100-125	0.01	0.006	131	80	17	68
261-106D	125-150	0.01	0.006	156	94	17	68
261-107D	150-175	0.01	0.007	181	108	17	68
261-108D	175-200	0.01	0.007	206	124	17	68
261-109D	200-225	0.01	0.008	231	132	17	68
261-110D	225-250	0.01	0.008	256	147	17	68
261-111D	250-275	0.01	0.009	281	158	17	68
261-112D	275-300	0.01	0.009	307	169	17	68

主要特点:

- 精准的机械式结构，以使读数更直观方便
- 内置式限力装置，确保精确的重复读数
- 硬质合金测量面，保证设备持久的稳定性

FEATURES

- With mechanical structure, easy to read
- Built-in force limiting device ensures accuracy of repeat reading
- Cemented carbide measuring surface ensures the constant stabilization of the equipment

外径千分尺
Outside Micrometer

S/STL hardened

261-901A1

260-101

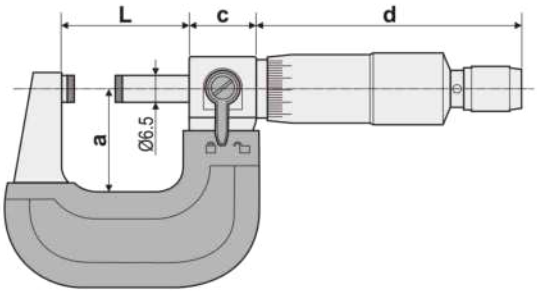

主要特点:
- 精准的机械式结构，以使读数更直观方便
- 内置式限力装置，确保精确的重复读数
- 硬质合金测量面，保证设备持久的稳定性
- 喷塑尺架

FEATURES
- With mechanical structure, easy to read
- Built-in force limiting device ensures accuracy of repeat reading
- Cemented carbide measuring surface ensures the constant stabilization of the equipment
- Plastic plate

货 号 Code NO.	测量范围 Measuring Range mm	精度 Accuracy mm	分度值 Graduation mm	L mm	a mm	c mm	d mm
261-901A1	0-25	0.004	0.01	31.5	26	17	68
260-101	0-25	0.002	0.001	31.5	26	17	68

G

微视差微米千分尺
Parallex-free Micron Micrometer

S/STL hardened

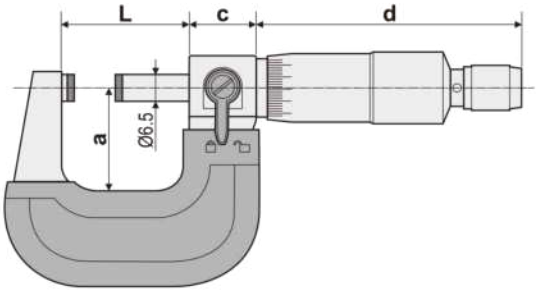

主要特点:
- 微米千分尺准确度更高，微视差刻线
- 内置式限力装置，确保精确的重复读数
- 硬质合金测量面，保证设备持久的稳定性
- 喷塑尺架

FEATURES
- Parallax-free reading, higher accuracy
- Built-in force limiting device ensures accuracy of repeat reading
- Cemented carbide measuring surface ensures the constant stabilization of the equipment
- Plastic plate

货 号 Code NO.	测量范围 Measuring Range mm	精度 Accuracy mm	分度值 Graduation mm	L mm	a mm	c mm	d mm
260-101A	0-25	0.002	0.001	31.5	26	17	68

大量程外径千分尺
Long Range Outside Micrometer

GB/T S/STL hardened

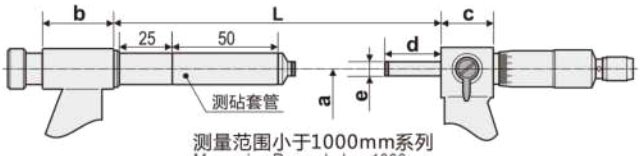

测量范围小于1000mm系列
Measuring Range below 1000mm

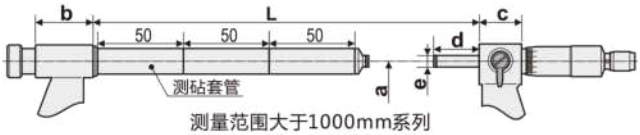

测量范围大于1000mm系列
Measuring Range over 1000mm

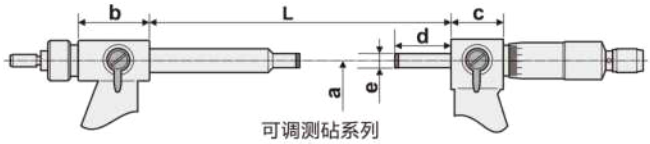

可调测砧系列

主要特点:
- 精准的机械式结构，以使读数更直观方便
- 内置式限力装置，确保精确的重复读数
- 硬质合金测量面，保证设备持久的稳定性

FEATURES
- With mechanical structure, easy to read
- Built-in force limiting device ensures accuracy of repeat reading
- Cemented carbide measuring surface ensures the constant stabilization of the equipment

货号 Code NO.	货号 Code NO. (可调测砧型)	测量范围 Measuring Range mm	分度值 Graduation mm	精度 Accuracy mm	重量 Weight kg	L mm	a mm	b mm	c mm	d mm	e mm
261-151	261-151A	300-400	0.01	0.011	2.0	413	230	32	17	28	Ø6.5
261-152	261-152A	400-500	0.01	0.013	2.5	513	280	32	17	28	Ø6.5
261-153	261-153A	500-600	0.01	0.014	3.0	613	330	32	17	28	Ø6.5
261-154	261-154A	600-700	0.01	0.016	3.4	713	380	32	17	28	Ø6.5
261-155	261-155A	700-800	0.01	0.018	4.8	813	440	32	17	28	Ø6.5
261-156	261-156A	800-900	0.01	0.020	5.0	913	490	32	17	28	Ø6.5
261-157	261-157A	900-1000	0.01	0.020	6.0	1013	540	32	17	28	Ø6.5
261-158		1000-1200	0.01	0.020	6.8	1213	650	32	20	53	Ø8
261-159		1200-1400	0.01	0.024	8.3	1413	760	32	20	53	Ø8
261-160		1400-1600	0.01	0.028	9.2	1613	860	32	20	53	Ø8
261-161		1600-1800	0.01	0.031	11.4	1813	970	32	20	53	Ø8
261-162		1800-2000	0.01	0.034	14.4	2013	1060	32	20	53	Ø8

数显型 Digital type

货号 Code NO. (可调测砧型)	货号 Code NO.	测量范围 Measuring Range mm	分辨力 Resolution mm	精度 Accuracy mm	重量 Weight kg	L mm	a mm	b mm	c mm	d mm	e mm
211-113EA	211-113EK	300-400	0.001	0.006	2.0	413	230	32	17	28	Ø6.5
211-114EA	211-114EK	400-500	0.001	0.007	2.5	513	280	32	17	28	Ø6.5
211-115EA	211-115EK	500-600	0.001	0.008	3.0	613	330	32	17	28	Ø6.5
211-116EA	211-116EK	600-700	0.001	0.009	3.4	713	380	32	17	28	Ø6.5
211-117EA	211-117EK	700-800	0.001	0.010	4.8	813	440	32	17	28	Ø6.5
211-118EA	211-118EK	800-900	0.001	0.011	5.0	913	490	32	17	28	Ø6.5
211-119EA	211-119EK	900-1000	0.001	0.012	6.0	1013	540	32	17	28	Ø6.5

G

管壁千分尺（球头式）
Tube Micrometer

GB/T S/STL hardened SPC 数据接口

主要特点:
- 用于测量不同管材的厚度
- 测量头采用特种钢材制成，保证高精度及稳定性
- 内置式限力装置，确保精确的重复读数

FEATURES
- For measuring wall thickness of various types of tubing etc.
- Spindle made of special steel to ensure high precision and stability
- Built-in force limiting device ensures accuracy of repeat reading

货号 Code NO.	测量范围 Measuring Range mm	分辨力 Resolution mm	精度 Accuracy mm	L mm	a mm	d mm
216-101	0-25	0.001	0.002	31	25	Ø6.5
216-102	25-50	0.001	0.002	56	35	Ø6.5
216-103	50-75	0.001	0.003	81	45	Ø6.5
216-104	75-100	0.001	0.003	106	55	Ø6.5

货号 Code NO.	测量范围 Measuring Range mm	分度值 Graduation mm	精度 Accuracy mm	L mm	a mm	d mm
266-211	0-25	0.01	0.004	31	24	Ø6.5
266-212	25-50	0.01	0.004	56	32	Ø6.5
266-213	50-75	0.01	0.005	81	45	Ø6.5
266-214	75-100	0.01	0.005	106	57	Ø6.5

深弓架千分尺
Sheet Metal Micrometer

GB/T | S/STL hardened | SPC 数据接口

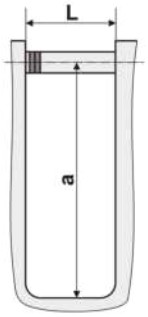

主要特点:
- 适用与测量钢板、纸张塑料板等板材的厚度

FEATURES
- Measure the thickness of steel sheet, paper, plastic sheet etc.

货 号 Code NO.	测量范围 Measuring Range mm	分辨力 Resolution mm	精度 Accuracy mm	L mm	a mm
211-101EK-60	0-25	0.001	0.004	31	60
211-101EK-100	0-25	0.001	0.004	31	100
211-101EK01	0-25	0.001	0.004	31	150
211-101EK-200	0-25	0.001	0.005	31	200
211-101EK-250	0-25	0.001	0.005	31	250
211-102EK-100	25-50	0.001	0.004	56	100
211-102EK01	25-50	0.001	0.004	56	150
211-102EK-200	25-50	0.001	0.005	56	200
211-102EK-250	25-50	0.001	0.005	56	250
211-103EK-100	50-75	0.001	0.005	81	100
211-103EK01	50-75	0.001	0.005	81	150
211-103EK-200	50-75	0.001	0.006	81	200
211-103EK-250	50-75	0.001	0.006	81	250
211-104EK-100	75-100	0.001	0.005	106	100
211-104EK01	75-100	0.001	0.005	106	150
211-104EK-200	75-100	0.001	0.006	106	200
211-104EK-250	75-100	0.001	0.006	106	250

货 号 Code NO.	测量范围 Measuring Range mm	分度值 Graduation mm	精度 Accuracy mm	L mm	a mm
261-101F-60	0-25	0.01	0.004	31	60
261-101F-100	0-25	0.01	0.004	31	100
261-101F	0-25	0.01	0.004	31	150
261-101F-200	0-25	0.01	0.005	31	200
261-101F-250	0-25	0.01	0.005	31	250
261-102F-100	25-50	0.01	0.004	56	100
261-102F	25-50	0.01	0.004	56	150
261-102F-200	25-50	0.01	0.005	56	200
261-102F-250	25-50	0.01	0.005	56	250
261-103F-100	50-75	0.01	0.005	81	100
261-103F	50-75	0.01	0.005	81	150
261-103F-200	50-75	0.01	0.006	81	200
261-103F-250	50-75	0.01	0.006	81	250
261-104F-100	75-100	0.01	0.005	106	100
261-104F	75-100	0.01	0.005	106	150
261-104F-200	75-100	0.01	0.006	106	200
261-104F-250	75-100	0.01	0.006	106	250

G

台式数显千分尺
Digital Bench Micrometer

GB/T | S/STL hardened | SPC 数据接口

分辨力:0.001mm
Resolution:0.001mm

主要特点:
- 绝对、相对测量模式转换
- 数据置零、数据预置功能
- 可垂直或水平放置，方便测量
- 可调节测量范围
- 内置式限力装置，确保精确的重复读数
- 硬质合金测量面，保证设备持久的稳定性

FEATURES
- Relative and absolute measure conversion
- Zero-setting, data preset functions
- Can be placed vertically or horizontally
- Adjustable measurement range
- Built-in force limiting device ensures accuracy of repeat reading
- Cemented carbide measuring surface ensures the constant stabilization of the equipment

货 号 Code NO.	测量范围 Measuring Range mm	精度 Accuracy mm	L mm	a mm	b mm	c mm	d mm
212-181	0-50	0.002	60	40	20	64.5	68

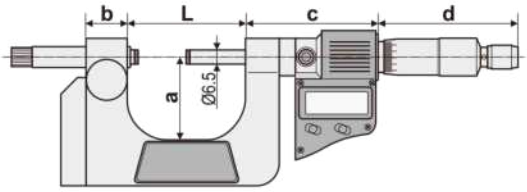

公法线千分尺
Disc Micrometer

GB/T | S/STL hardened | SPC 数据接口

主要特点:
- 方便测量直齿轮和斜齿轮齿根切线方向的长度, 以及薄板材厚度
- 内置式限力装置，确保精确的重复读数
- 硬质合金测量面，保证设备持久的稳定性

FEATURES
- Easy to measure tooth width of straight or bevel wheel, and small thickness
- Built-in force limiting device ensures accuracy of repeat reading
- Cemented carbide measuring surface ensures the constant stabilization of the equipment

货 号 Code NO.	测量范围 Measuring Range mm	分辨力 Resolution mm	精度 Accuracy mm	L mm	a mm	d mm
212-101	0-25	0.001	0.004	31	25	Ø6.5
212-102	25-50	0.001	0.004	56	35	Ø6.5
212-103	50-75	0.001	0.005	81	45	Ø6.5
212-104	75-100	0.001	0.005	106	55	Ø6.5

货 号 Code NO.	测量范围 Measuring Range mm	分度值 Graduation mm	精度 Accuracy mm	L mm	a mm	d mm
262-101A	0-25	0.01	0.004	31	24	Ø6.5
262-102A	25-50	0.01	0.004	56	32	Ø6.5
262-103A	50-75	0.01	0.005	81	45	Ø6.5
262-104A	75-100	0.01	0.005	106	57	Ø6.5

杠杆千分尺
Indicating Micrometer

GB/T | S/STL hardened

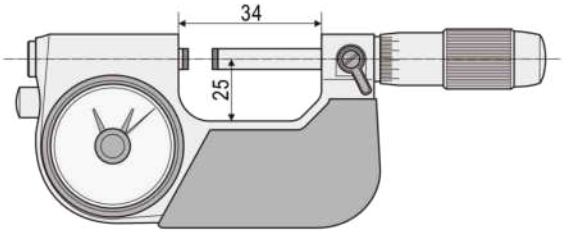

主要特点:
- 适用于批量零件的精密测量
- 硬质合金测量面，保证设备持久的稳定性

FEATURES
- Applied to high precise measurement for workpieces
- Cemented carbide measuring surface ensures the constant stabilization of the equipment

货 号 Code NO.	测量范围 Measuring Range mm	精度 Accuracy mm	分度值 Graduation mm
251-101	0-25	0.003	0.01

①.根据所测物品的理论尺寸，选定相应的标准量规，如 5.000mm 陶瓷量块；
According to the theoretical size of the measured workpiece, select the corresponding standard gauge block. Such as 5.000 mm gauge block.

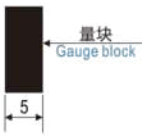

②.转动微分筒刻度对准5，使用锁定装置固定微分筒;
Adjust the device reading to 5mm, lock the spindle clamp.

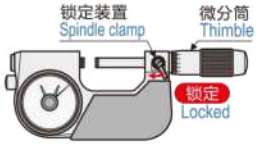

③.边按压按钮, 边夹住选定的量规, 放开按钮;
Press button, and clamp the selected gauge block, then release.

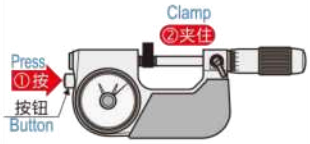

④.转动指针刻度板,将指针对准0;
Turn the dial, make the dial needle to position 0.

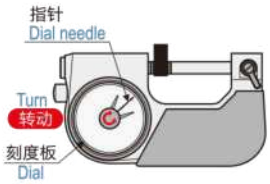

⑤.再度按压按钮，取下量规，完成测量准备;
Press button again, remove gauge block, and get ready.

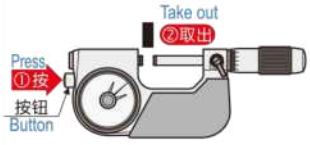

⑥.根据设定的公差值，将界限针调整到相应位置，测量时可以瞬间判定是否在公差范围内。
According to the tolerance value, adjust the position of the limit indicator

G

管壁千分尺（双球头）
Tube Micrometer

GB/T | S/STL hardened | SPC 数据接口

主要特点：
- 用于测量不同管材的厚度
- 内置式限力装置，确保精确的重复读数
- 测量头采用特种钢材制成，保证高精度及稳定性

FEATURES
- For measuring wall thickness of various types of tubing etc.
- Built-in force limiting device ensures accuracy of repeat reading
- Spindle made of special steel to ensure high precision and stability

货 号 Code NO.	测量范围 Measuring Range mm	分辨力 Resolution mm	精度 Accuracy mm	L mm	a mm
216-201	0-25	0.001	0.002	31	25
216-202	25-50	0.001	0.002	56	35
216-203	50-75	0.001	0.003	81	45
216-204	75-100	0.001	0.003	106	55

货 号 Code NO.	测量范围 Measuring Range mm	分度值 Graduation mm	精度 Accuracy mm	L mm	a mm
261-221	0-25	0.01	0.004	31	24
261-222	25-50	0.01	0.004	56	32
261-223	50-75	0.01	0.005	81	45
261-224	75-100	0.01	0.005	106	57

G

双尖头千分尺
Point Micrometer

GB/T | S/STL hardened | SPC 数据接口

主要特点：
- 尖头型测头和测砧可用于测量钻头颈部、小沟槽、键槽等其它难以触及的部位的厚度
- 测量头采用特种钢材制成，保证高精度及稳定性
- 内置式限力装置，确保精确的重复读数

FEATURES
- Pointed spindle and anvil for measuring the web thickness of drills, small grooves, key-ways, and other hard-to-reach dimentions
- Spindle made of special steel to ensure high precision and stability
- Built-in force limiting device ensures accuracy of repeat reading

货 号 Code NO.	测量范围 Measuring Range mm	分辨力 Resolution mm	精度 Accuracy mm	L mm	a mm
211-221	0-25	0.001	0.004	56	35
211-222	25-50	0.001	0.004	81	45
211-223	50-75	0.001	0.005	106	55
211-224	75-100	0.001	0.006	131	67

货 号 Code NO.	测量范围 Measuring Range mm	分度值 Graduation mm	精度 Accuracy mm	L mm	a mm
261-241	0-25	0.01	0.004	56	32
261-242	25-50	0.01	0.004	81	45
261-243	50-75	0.01	0.005	106	57
261-244	75-100	0.01	0.005	131	67

管壁千分尺（立柱式）
Tube Micrometer

GB/T | S/STL hardened | SPC 数据接口

主要特点：
- 用于测量不同管材的厚度
- 测量头采用特种钢材制成，保证高精度及稳定性
- 内置式限力装置，确保精确的重复读数

FEATURES
- For measuring wall thickness of various types of tubing etc.
- Spindle made of special steel to ensure high precision and stability
- Built-in force limiting device ensures accuracy of repeat reading

货 号 Code NO.	测量范围 Measuring Range mm	分辨力 Resolution mm	精度 Accuracy mm	L mm	a mm
216-181	0-25	0.001	0.004	31	25
216-182	25-50	0.001	0.004	56	35

货 号 Code NO.	测量范围 Measuring Range mm	分度值 Graduation mm	精度 Accuracy mm	L mm	a mm
266-181	0-25	0.01	0.004	31	24
266-182	25-50	0.01	0.004	56	32

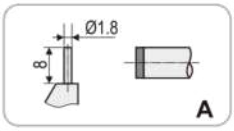

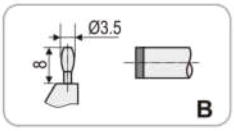

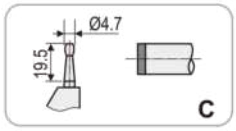

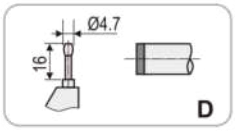

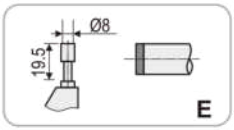

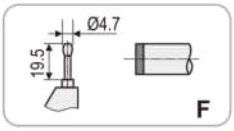

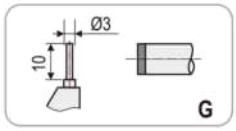

G

轮毂千分尺
Hub Micrometer

GB/T | S/STL hardened | SPC 数据接口

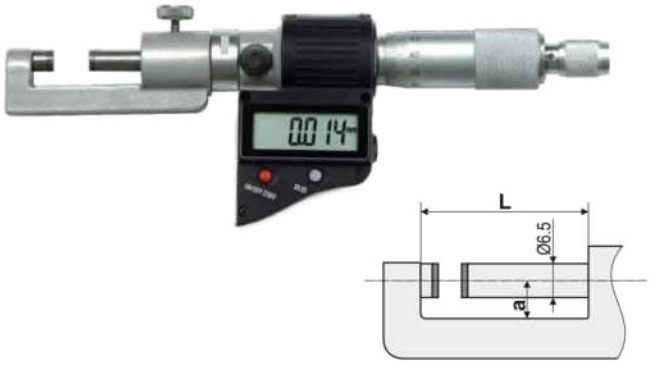

主要特点：
- 硬质合金测量面，保证设备持久的稳定性
- 用于测量轮毂厚度和内孔台阶的宽度
- 内置式限力装置，确保精确的重复读数

FEATURES
- Cemented carbide measuring surface ensures the constant stabilization of the equipment
- For measuring wire thickness and step width of inner hold
- Built-in force limiting device ensures accuracy of repeat reading

货 号 Code NO.	测量范围 Measuring Range mm	分辨力 Resolution mm	精度 Accuracy mm	L mm	a mm
212-191	0-25	0.001	0.002	31	7

货 号 Code NO.	测量范围 Measuring Range mm	分度值 Graduation mm	精度 Accuracy mm	L mm	a mm
262-201	0-25	0.01	0.004	31	7
262-201A	0-25	0.01	0.004	31	7

单尖头千分尺
Single Point Type Micrometer

GB/T S/STL hardened SPC 数据接口

主要特点:
- 尖头型测头和测砧可用于测量钻头颈部、小沟槽、键槽等其它难以触及的部位的厚度
- 测量头采用特种钢材制成，保证高精度及稳定性
- 内置式限力装置，确保精确的重复读数

FEATURES
- Pointed spindle and anvil for measuring the web thickness of drills, small grooves, key ways, and other hard-to-reach dimensions
- Spindle made of special steel to ensure high precision and stability
- Built-in force limiting device ensures accuracy of repeat reading

货 号 Code NO.	测量范围 Measuring Range mm	分辨力 Resolution mm	精度 Accuracy mm	L mm	a mm
211-211	0-25	0.001	0.004	31	25
211-212	25-50	0.001	0.004	56	35
211-213	50-75	0.001	0.005	81	45

货 号 Code NO.	测量范围 Measuring Range mm	分度值 Graduation mm	精度 Accuracy mm	L mm	a mm
262-231	0-25	0.01	0.004	31	25
262-232	25-50	0.01	0.004	56	32
262-233	50-75	0.01	0.005	81	45
262-234	75-100	0.01	0.005	106	57

G

单叶片尖头千分尺
Single Blade and Point Type Micrometer

GB/T S/STL hardened SPC 数据接口

主要特点:
- 尖头型测头和测砧可用于测量钻头颈部、小沟槽、键槽等其它难以触及的部位的厚度
- 测量头采用特种钢材制成，保证高精度及稳定性
- 内置式限力装置，确保精确的重复读数

FEATURES
- Pointed spindle and anvil for measuring the web thickness of drills, small grooves, key ways, and other hard-to-reach dimensions
- Spindle made of special steel to ensure high precision and stability
- Built-in force limiting device ensures accuracy of repeat reading

货 号 Code NO.	测量范围 Measuring Range mm	分辨力 Resolution mm	精度 Accuracy mm	L mm	a mm
211-231	0-25	0.001	0.004	31	25
211-232	25-50	0.001	0.004	56	35
211-233	50-75	0.001	0.005	81	45

货 号 Code NO.	测量范围 Measuring Range mm	分度值 Graduation mm	精度 Accuracy mm	L mm	a mm
262-251	0-25	0.01	0.004	31	25
262-252	25-50	0.01	0.004	56	32
262-253	50-75	0.01	0.005	81	45
262-254	75-100	0.01	0.005	106	57

花键千分尺
Slender Anvil Micrometer

GB/T | S/STL hardened | SPC 既福福口

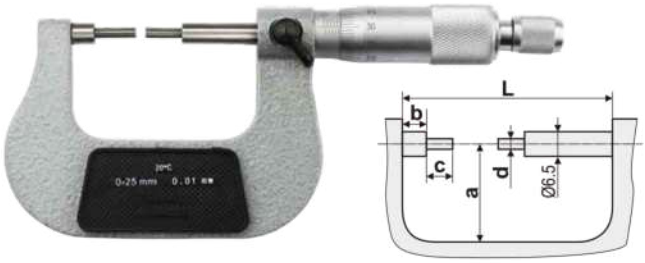

主要特点:
- 液晶显示屏显示测量数据，使读数直观准确
- 设定初始值、测量单位转换、数据输出
- 测量头为小直径测头,可用于测量花键轴、槽和键沟
- 内置式限力装置，确保精确的重复读数

FEATURES
- LCD displays measuring data and makes direct and correct readout
- Zero-setting, data hold, data preset functions
- Small anvil and spindle diameter for measuring splines, slots and key-ways
- Built-in force limiting device ensures accuracy of repeat reading

货 号 Code NO.	测量范围 Measuring Range mm	分辨力 Resolution mm	精度 Accuracy mm	L mm	a mm	b mm	c mm	d mm
214-151	0-25	0.001	0.002	56	35	6.5	10	Ø3
214-151-1, -2	0-25	0.001	0.002	56	35	6.5	10	Ø1, Ø2
214-151A	0-25	0.001	0.002	56	35	20	5	Ø3
214-151A-1, -2	0-25	0.001	0.002	56	35	20	5	Ø1, Ø2
214-152	25-50	0.001	0.002	81	45	6.5	10	Ø3
214-152-1, -2	25-50	0.001	0.002	81	45	6.5	10	Ø1, Ø2
214-152A	25-50	0.001	0.002	81	45	20	5	Ø3
214-152A-1, -2	25-50	0.001	0.002	81	45	20	5	Ø1, Ø2
214-153	50-75	0.001	0.003	106	55	6.5	10	Ø3
214-153-1, -2	50-75	0.001	0.003	106	55	6.5	10	Ø1, Ø2
214-153A	50-75	0.001	0.003	106	55	20	5	Ø3
214-153A-1, -2	50-75	0.001	0.003	106	55	20	5	Ø1, Ø2

货 号 Code NO.	测量范围 Measuring Range mm	分辨力 Resolution mm	精度 Accuracy mm	L mm	a mm	b mm	c mm	d mm
264-101	0-25	0.01	0.004	56	32	6.5	10	Ø3
264-101-1, -2	0-25	0.01	0.004	56	32	6.5	10	Ø1, Ø2
264-101A	0-25	0.01	0.004	56	32	20	5	Ø3
264-101A-1, -2	0-25	0.01	0.004	56	32	20	5	Ø1, Ø2
264-102	25-50	0.01	0.004	81	45	6.5	10	Ø3
264-102-1, -2	25-50	0.01	0.004	81	45	6.5	10	Ø1, Ø2
264-102A	25-50	0.01	0.004	81	45	20	5	Ø3
264-102A-1, -2	25-50	0.01	0.004	81	45	20	5	Ø1, Ø2
264-103	50-75	0.01	0.005	106	57	6.5	10	Ø3
264-103-1, -2	50-75	0.01	0.005	106	57	6.5	10	Ø1, Ø2
264-103A	50-75	0.01	0.005	106	57	20	5	Ø3
264-103A-1, -2	50-75	0.01	0.005	106	57	20	5	Ø1, Ø2
264-104	75-100	0.01	0.005	131	67	6.5	10	Ø3
264-104-1, -2	75-100	0.01	0.005	131	67	6.5	10	Ø1, Ø2
264-104A	75-100	0.01	0.005	131	67	20	5	Ø3
264-104A-1, -2	75-100	0.01	0.005	131	67	20	5	Ø1, Ø2

G

线径千分尺
Wire Micrometer

GB/T | S/STL hardened | SPC 既福福口

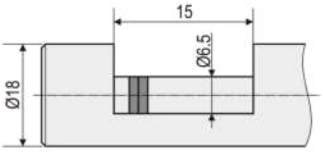

主要特点:
- 硬质合金测量面，保证设备持久的稳定性
- 测量线材的粗细和小球的直径
- 内置式限力装置，确保精确的重复读数

FEATURES
- Cemented carbide measuring surface ensures the constant stabilization of the equipment
- For measuring wire and ball diameters
- Built-in force limiting device ensures accuracy of repeat reading

货 号 Code NO.	测量范围 Measuring Range mm	分辨力 Resolution mm	精度 Accuracy mm
212-201	0-10	0.001	0.002

货 号 Code NO.	测量范围 Measuring Range mm	分度值 Graduation mm	精度 Accuracy mm
262-401	0-10	0.01	0.004

多用千分尺
Multi-function Micrometer

GB/T | S/STL hardened | SPC 数据接口

主要特点:
- 可测量管材厚度、轴肩边距、沟槽至端面、台阶高度等尺寸
- 内置式限力装置，确保精确的重复读数
- 三种可换测砧可选
- 通电后显示绝对测量的起始值
- 自动断电功能，延长电池使用寿命
- 任意位置清零

FEATURES
- Can measure thickness of tubing, diameter of axis, distance from groove to surface, step height etc
- Built-in force limiting device ensures accuracy of repeat reading
- Three optional measuring anvils
- Turn on to display ABS measurement original value
- Automatically turn off for saving battery
- Zero-setting at any position

货 号 Code NO.	测量范围 Measuring Range mm	分辨力 Resolution mm	精度 Accuracy mm	L mm	a mm
212-401	0-25	0.001	0.004	28.5	26
212-402	25-50	0.001	0.004	53.5	26

货 号 Code NO.	测量范围 Measuring Range mm	分度值 Graduation mm	精度 Accuracy mm	L mm	a mm
261-401	0-25	0.01	0.004	28.5	26
261-402	25-50	0.01	0.004	53.5	26

G

深度千分尺
Digital Depth Micrometer

GB/T | S/STL hardened | SPC 数据接口

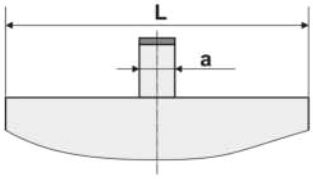

主要特点:
- 硬质合金测量面，保证设备持久的稳定性
- 设定初始值、测量单位转换、数据输出
- 高精度读取沟槽深度及台阶高度
- 为恒力测量提供棘轮装置，确保精确的重复读数

FEATURES
- Cemented carbide measuring surface ensures the constant stabilization of the equipment
- Origin setting, mm/inch conversion, data output
- High-precision measurement of groove depth and step height
- Ratchet sleeve force for accurate repeatable reading

货 号 Code NO.	测量范围 Measuring Range mm	分辨力 Resolution mm	精度 Accuracy mm	L mm	a mm
231-101	0-25	0.001	0.004	100	Ø6.5

货 号 Code NO.	测量范围 Measuring Range mm	分度值 Graduation mm	精度 Accuracy mm	L mm	a mm
281-101LT	0-25	0.01	0.004	85	Ø8

数显测微头
Digital Micrometer Head

GB/T | S/STL hardened | SPC 欧盟船口

241-101

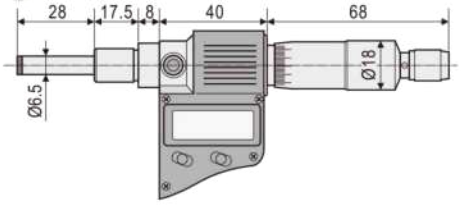

241-201

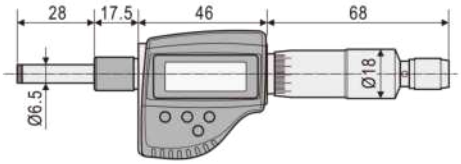

241-201C

241-201B

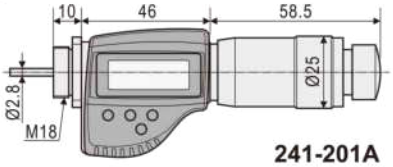

241-201A

主要特点:
- 设定初始值、测量单位转换、绝对/相对测量转换、数据输出
- 硬质合金测量面，保证设备持久的稳定性
- 内置式限力装置，确保精确的重复读数

FEATURES
- Origin setting, mm/inch conversion, switch of absolute measurement and incremental measurement, data output
- Cemented carbide measuring surface ensures the constant stabilization of the equipment
- Built-in force limiting device ensures accuracy of repeat reading

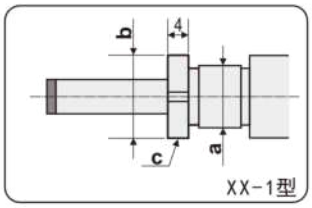

XX-1型

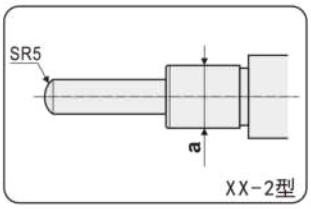

XX-2型

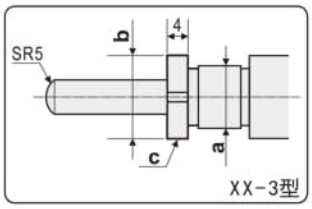

XX-3型

货 号 Code NO.	测量范围 Measuring Range mm	分辨力 Resolution mm	精度 Accuracy mm	a mm	b mm	c mm
241-101	0-25	0.001	0.003	Ø12	—	—
241-101-1	0-25	0.001	0.003	Ø12	Ø16	M12x0.5
241-101-2	0-25	0.001	0.003	Ø12	—	—
241-101-3	0-25	0.001	0.003	Ø12	Ø16	M12x0.5
241-101A	0-25	0.001	0.003	Ø10	—	—
241-101A-1	0-25	0.001	0.003	Ø10	Ø14	M9.5x0.5
241-101A-2	0-25	0.001	0.003	Ø10	—	—
241-101A-3	0-25	0.001	0.003	Ø10	Ø14	M9.5x0.5
241-201	0-25	0.001	0.003	Ø12	—	—
241-201-1	0-25	0.001	0.003	Ø12	Ø16	M12x0.5
241-201-2	0-25	0.001	0.003	Ø12	—	—
241-201-3	0-25	0.001	0.003	Ø12	Ø16	M12x0.5
241-201A	0-18	0.001	0.003	—	—	—
241-201B	0-18	0.001	0.003	—	—	—
241-201C	0-28	0.001	0.003	—	—	—

G

千分尺座
Micrometer Stand

722-101LT

主要特点:
- 夹持范围0-100mm千分尺
- 夹持张口15mm

FEATURES
- Accommodates 0-100mm micrometers
- Mouth width is 15mm

三爪内径数显千分尺
Digital Three-point Inside Micrometer

GB/T | S/STL hardened | SPC 既强相口

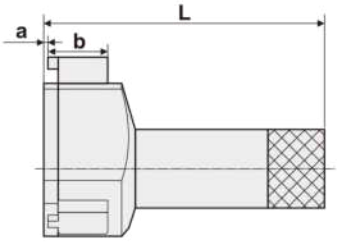

主要特点:
- 适用于盲孔和通孔的精密测量，配有接长杆可测量深孔尺寸
- 硬质合金测量面，保证设备持久的稳定性
- 配有校对环规校对零位
- 棘轮测力，数据输出，预置功能
- IP54防护等级

FEATURES
- Bore depth measuring with a long extend rod
- Cemented carbide measuring surface ensures the constant stabilization of the equipment
- Calibration setting rings for zero setting
- With ratchet sleeve force, data output and value presetting
- IP54 Protection class

货 号 Code NO.	测量范围 Measuring Range mm	分辨力 Resolution mm	精度 Accuracy mm	L mm	a mm	b mm
221-161-1	40-50	0.001	0.005	75	0.5	15
221-161-2	50-63	0.001	0.005	80	0.5	17
221-161-3	62-75	0.001	0.005	80	0.5	17
221-161-4	75-88	0.001	0.005	80	0.5	17
221-161-5	87-100	0.001	0.005	80	0.5	17

G

蓝牙三点内径数显千分尺
Bluetooth Digital Three-point Inside Micrometer

S/STL hardened

NEW

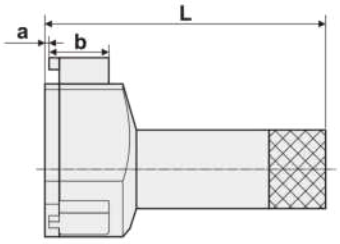

主要特点:
- 适用于盲孔和通孔的精密测量，配有接长杆可测量深孔尺寸
- Ip65防护等级，硬质合金测量面，保证设备持久的稳定性
- 棘轮测力，内置蓝牙，可把测量数据传输到手机、平板和电脑
- 两种工作模式:简易连接软件模式和HID配对键盘模式
- 具备OTA无线升级功能，功能定制升级，无需返厂

FEATURES
- Bore depth measuring with a long extend rod
- IP65 water-proof function, cemented carbide measuring surface ensures the constant stabilization of the equipment
- With ratchet sleeve force, Built-in Bluetooth, measurement data can be transmitted to mobile phones, tablets and computers
- Two working modes: simple connection software mode and HID paired keyboard mode
- With OTA wireless upgrade function, function customization and upgrade, no need to return to the factory

货 号 Code NO.	测量范围 Measuring Range mm	分辨力 Resolution mm	精度 Accuracy mm	L mm	a mm	b mm
2212-161A-0BT	40-50	0.001	0.005	75	0.5	15
2212-161A-1BT	50-63	0.001	0.005	80	0.5	17
2212-161A-2BT	62-75	0.001	0.005	80	0.5	17
2212-161A-3BT	75-88	0.001	0.005	80	0.5	17
2212-161A-4BT	87-100	0.001	0.005	80	0.5	17

绝对原点数显杠杆千分尺
Absolute Digital Indicating Micrometer

GB/T S/STL hardened

NEW

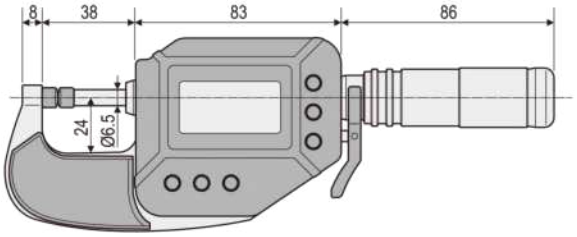

货 号 Code NO.	测量范围 Measuring Range mm	分辨力 Resolution mm	精度 Accuracy mm
211-901WH	0-25	0.001	0.001

主要特点:
- 采用绝对编码光栅位移传感器技术, 无响应速度限制, 且数据处理更快更稳
- 采用内置可充电锂电池，连续监测时可以外接充电器长时间工作
- 任意位置清零
- 公英制转换
- 记录连续测量过程中的最大值或最小值
- 记录连续测量的最大与最小值之差(△)，用于平面度和同轴度的测量
- 在测量过程中, 根据设置的上下极限尺寸可自动判定工件是否合格
- 对工件进行分段测量，测量结束后可以将多段数据进行累加
- 以绝对原点方式测量。测量前预置一个基本尺寸，测量时读出来的数据是工件的实际尺寸，即实际尺寸=预置基本尺寸+偏差
- 测量的数据可通过数据采集系统进行数据传输

FEATURES
- Absolute coding grating displacement sensor technology, no limit for response speed, data processing is faster and more stable
- Build-in rechargeable lithium battery, external charger can be used for continuous monitoring
- Zero-setting at any position
- Mm/inch conversion at any position
- Hold the max or the minimum reading during measurement
- Tracing the balance between Max and Min value (△=MAX-MIN)
- TOL Setting can check if the item is regular
- Segment measurement of workpiece, accumulate segment date after measurement
- Original setting without repeated zero-setting. Preset one basic size before measurement, and the data read out during measurement is the actual size of the workpiece, that is, the actual size = preset basic size + deviation
- Measuring value can be transmitted to PC

G

两点内测千分尺
Inside Micrometer

S/STL hardened

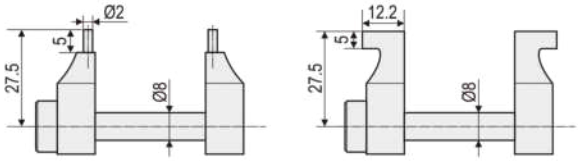

主要特点:
- 适用于各种内尺寸测量
- 硬质合金量面

FEATURES
- Applied to all kinds of inside diameter measurements
- Carbide tips

货 号 Code NO.	测量范围 Measuring Range mm	分度值 Graduation mm	精度 Accuracy mm
271-201	5-30	0.01	0.005
271-202	25-50	0.01	0.006
271-203	50-75	0.01	0.007
271-204	75-100	0.01	0.008

卡爪型千分尺
Caliper Jaw Micrometer

S/STL hardened

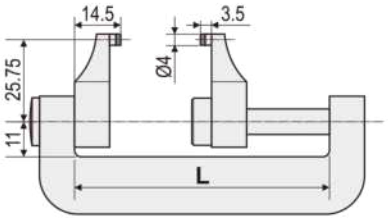

主要特点:
- 适用于外径千分尺不宜测量的零件
- 棘轮测力
- 硬质合金量面

FEATURES
- For the items can not be measured by outside Micrometer
- With ratchet sleeve force
- Carbide tips

货 号 Code NO.	测量范围 Measuring Range mm	分度值 Graduation mm	精度 Accuracy mm	L mm
262-191	0-25	0.01	0.005	55
262-192	25-50	0.01	0.006	80
262-193	50-75	0.01	0.007	105
262-194	75-100	0.01	0.008	130

G

双叶片千分尺
Blade Micrometer

S/STL hardened

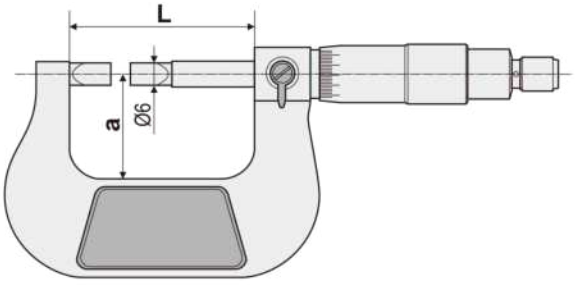

主要特点:
- 可测量键槽，外环形槽等凹槽尺寸
- 高精直进式丝杆
- 带棘轮测力机构
- 两种扁形测头厚度可选

FEATURES
- Can measure the diameter of grooves
- High precision straight screw
- With ratchet sleeve force
- Two optional flat measuring faces

A型、C型（硬质合金测头）

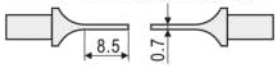

B型、D型（硬质合金测头）

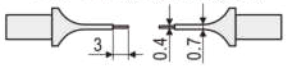

货 号 Code NO.	测量范围 Measuring Range mm	分度值 Graduation mm	精度 Accuracy mm	L mm	a mm
262-301	0-25	0.01	0.004	56	32
262-302	25-50	0.01	0.004	81	45
262-303	50-75	0.01	0.005	106	57
262-304	75-100	0.01	0.005	131	67

鸭嘴型千分尺
Micrometer with Special Flat Anvil

S/STL hardened

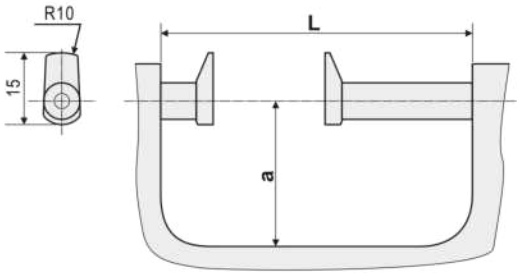

主要特点:
- 可测量齿轮公法线和台阶厚度尺寸
- 高精直进式丝杆
- 内置式限力装置，确保精确的重复读数
- 两种鸭嘴形测头可选

FEATURES
- Can measure gear wheel dual point and step height
- High precision straight screw
- Built-in force limiting device ensures accuracy of repeat reading
- Two optional flat measuring faces

货 号 Code NO.	测量范围 Measuring Range mm	分度值 Graduation mm	精度 Accuracy mm	L mm	a mm
261-601	0-25	0.01	0.004	56	32
261-602	25-50	0.01	0.004	81	45
261-603	50-75	0.01	0.005	106	57
261-604	75-100	0.01	0.005	131	67
261-605	100-125	0.01	0.006	156	79
261-606	125-150	0.01	0.006	181	91.5
261-607	150-175	0.01	0.007	206	104

深度千分尺
Depth Micrometer

S/STL hardened

G

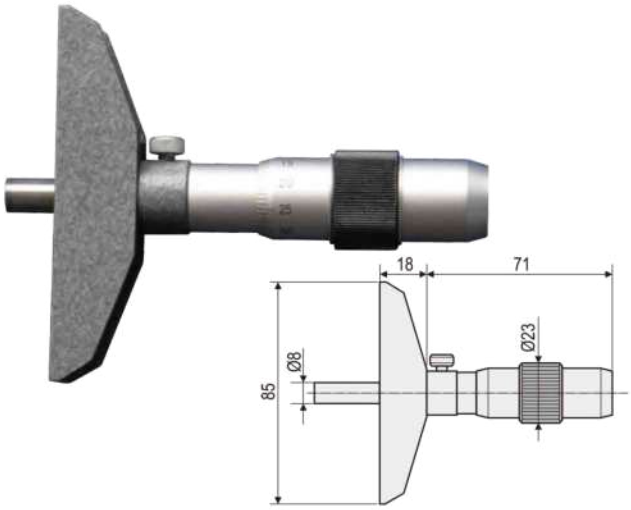

主要特点:
- 高精度读取沟槽深度
- 硬质合金测量表面，高精度研磨
- 套管上刻有清晰的刻度值，提供快速阅读能力
- 棘轮套测力，确保精确的重复读数

FEATURES
- High precision groove depth measurement
- Fine polished and carbide tips
- Clear graduation for quick reading
- Inside force-limited device for precise repeatable reading

货 号 Code NO.	测量范围 Measuring Range mm	分度值 Graduation mm	精度 Accuracy mm	测杆 Rod
282-101LT	0-25	0.01	0.004	1
282-102LT	0-50	0.01	0.004	2
282-103LT	0-75	0.01	0.005	3
282-104LT	0-100	0.01	0.005	4
282-105LT	0-125	0.01	0.005	5
282-106LT	0-150	0.01	0.005	6
282-107LT	0-175	0.01	0.006	7
282-108LT	0-200	0.01	0.006	8
282-109LT	0-225	0.01	0.007	9
282-110LT	0-250	0.01	0.007	10

测微头
Micrometer Head

S/STL hardened

291-101A

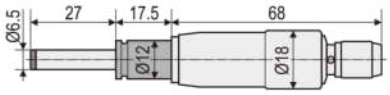

291-101B

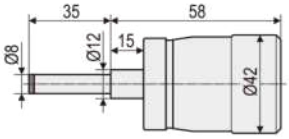

主要特点:
- 纵横刻线，方便读数，大直径管套，提供高精度测量
- 硬质合金测量面，保证设备持久的稳定性
- 内置式限力装置，确保精确的重复读数

291-102B

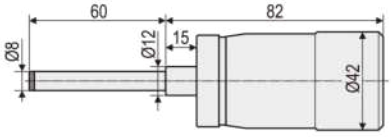

FEATURES
- Graduation in two directions for easy reading, and big graduation for precise measurement
- Cemented carbide measuring surface ensures the constant stabilization of the equipment
- Built-in force limiting device ensures accuracy of repeat reading

货 号 Code NO.	测量范围 Measuring Range mm	分度值 Graduation mm	精度 Accuracy mm
291-101A	0-25	0.01	0.004
291-101B	0-25	0.01	0.004
291-102B	0-50	0.01	0.004

G

接杆式两点内径千分尺
Micrometer with Extension Rod

S/STL hardened

机械型

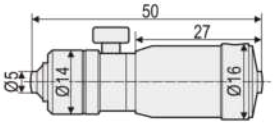

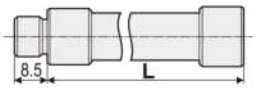

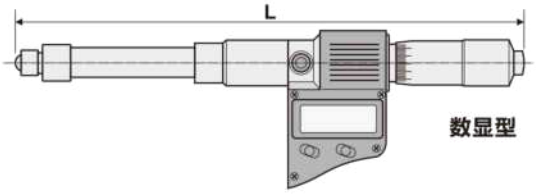

数显型

货 号 Code NO. (数显型)	测量范围 Measuring Range mm	分辩力 Resolution mm	精度 Accuracy mm	延长杆 (Extension rod) L mm
221-131	200-225	0.001	0.008	
221-131-1	200-1000	0.001	0.022	200x3 100 50 25

货 号 Code NO. (机械型)	测量范围 Measuring Range mm	分度值 Graduation mm	精度 Accuracy mm	测头行程 Travel of measuring tips mm	延长杆 (Extension rod) L mm
271-101LT	50-63	0.01	0.005	13	
271-102LT	50-75	0.01	0.006	13	13
271-103LT	50-100	0.01	0.007	13	13 25
271-104LT	50-150	0.01	0.009	13	13 25 50
271-105LT	50-250	0.01	0.012	13	13 25 50 100
271-106LT	50-400	0.01	0.017	13	13 25 50 100 150
271-107LT	50-500	0.01	0.019	13	13 25 50x2 100 200
271-108LT	50-600	0.01	0.021	13	13 25 50 100 150 200
271-109LT	50-900	0.01	0.029	13	13 25 50 100x2 150 200x2
271-110LT	50-1000	0.01	0.032	13	13 25 50 100x3 150 200x2

主要特点:
- 通过连接延长管和带有微分头的测头可扩大测量范围

FEATURES
- It can extend measuring range by fitting extension rod and measuring anvil with micrometer head

三点内径千分尺
Three-points Inside Micrometer

S/STL hardened

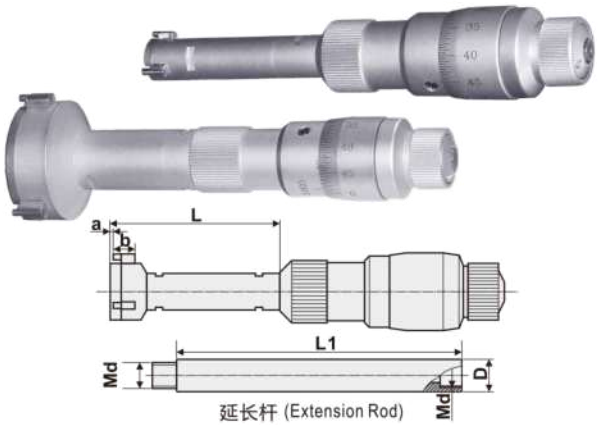

主要特点:

- 硬质合金测量表面(测砧)确保高耐磨度，三爪硬质合金圆柱不易磨损
- 可接近盲孔底端进行测量
- 内置式限力装置，确保精确的重复读数
- 通过精密环规（选件）进行零点调节

FEATURES

- Highly durable because of carbide-tipped contact points (anvils)
- Measurement can be taken closer to the bottom of a blind bore
- Built-in force limiting device ensures accuracy of repeat reading
- Setting rings for zero point adjustment are optional

套装型(13件/套) Set(13pcs/set)

货号 Code NO.	测量范围 Measuring Range mm	环规 Setting Ring	延长杆 Extension Rod
271-151	6-8	Ø6	271-151-JG-A
	8-10		
	10-12	Ø10	
271-154A	12-16	Ø16	271-154A-JG
	16-20		
271-157A	20-25	Ø25	271-157-JG
	25-30		271-157A-JG
	30-40		
	40-50	Ø40	
271-161A	50-63		271-161A-JG
	62-75	Ø62	
	75-88		
	87-100	Ø87	

单件(13件/套) Single(13pcs/set)

货号 Code NO.	测量范围 Measuring Range mm	环规 Setting Ring	分度值 Graduation mm	精度 Accuracy mm	L mm	a mm	b mm
271-151-1	6-8	Ø8	0.001	0.004	56	0.6	2.5
271-151-2	8-10	Ø8	0.001	0.004	56	0.6	2.5
271-151-3	10-12	Ø10	0.001	0.004	56	0.6	2.5
271-154A-1	12-16	Ø16	0.005	0.004	76	0.3	6
271-154A-2	16-20	Ø16	0.005	0.004	76	0.3	6
271-157-1	20-25	Ø25	0.005	0.004	84	0.5	9
271-157-2	25-30	Ø25	0.005	0.004	84	0.5	9
271-157A-3	30-40	Ø35	0.005	0.004	96	0.5	14
271-157A-4	40-50	Ø40	0.005	0.005	96	0.5	14
271-161A-1	50-63	Ø50	0.005	0.005	100	0.5	16.5
271-161A-2	62-75	Ø62	0.005	0.005	100	0.5	16.5
271-161A-3	75-88	Ø87	0.005	0.005	100	0.5	16.5
271-161A-4	87-100	Ø87	0.005	0.005	100	0.5	16.5

套装型(16件/套) Set(16pcs/set)

货号 Code NO.	测量范围 Measuring Range mm	环规 Setting Ring	延长杆 Extension Rod
271-151	6-8	Ø8	271-151-JG
	8-10	Ø10	
	10-12		
271-154	11-14	Ø11	271-154-JG
	14-17	Ø17	
	17-20		
271-157	20-25	Ø25	271-157-JG
	25-30		
	30-35	Ø35	
	35-40		
271-161	40-50		271-161-JG
	50-60	Ø50	
	60-70		
	70-80	Ø70	
	80-90		
	90-100	Ø90	

单件(16件/套) Single(16pcs/set)

货号 Code NO.	测量范围 Measuring Range mm	环规 Setting Ring	分度值 Graduation mm	精度 Accuracy mm	L mm	a mm	b mm
271-151-1	6-8	Ø8	0.001	0.004	56	0.6	2.5
271-151-2	8-10	Ø8	0.001	0.004	56	0.6	2.5
271-151-3	10-12	Ø10	0.001	0.004	56	0.6	2.5
271-154-1	11-14	Ø11	0.005	0.004	76	0.3	6
271-154-2	14-17	Ø17	0.005	0.004	76	0.3	6
271-154-3	17-20	Ø17	0.005	0.004	76	0.3	6
271-157-1	20-25	Ø25	0.005	0.004	84	0.5	9
271-157-2	25-30	Ø25	0.005	0.004	84	0.5	9
271-157-3	30-35	Ø35	0.005	0.004	84	0.5	9
271-157-4	35-40	Ø35	0.005	0.004	84	0.5	9
271-161-1	40-50	Ø40	0.005	0.005	98	0.5	14.5
271-161-2	50-60	Ø50	0.005	0.005	98	0.5	14.5
271-161-3	60-70	Ø60	0.005	0.005	98	0.5	14.5
271-161-4	70-80	Ø70	0.005	0.005	98	0.5	14.5
271-161-5	80-90	Ø80	0.005	0.005	98	0.5	14.5
271-161-6	90-100	Ø90	0.005	0.005	98	0.5	14.5

延长杆 (Extension Rod)

货号 Code NO.	L1 mm	D mm	Md mm	适用型号 Applicable Models
271-151-JG	50	5.8	M5x0.5	271-151-1, 271-151-2, 271-151-3
271-151-JG-A	100	5.8	M5x0.5	271-151-1, 271-151-2, 271-151-3
271-154-JG	100	10.8	M8.5x0.5	271-154-1, 271-154-2, 271-154-3
271-154A-JG	150	10.8	M8.5x0.5	271-154A-1, 271-154A-2
271-157-JG	150	17	M14x0.75	271-157-1, 271-157-2, 271-157-3, 271-157-4
271-157A-JG	150	18	M16x1	271-157A-3, 271-157A-4
271-161-JG	150	22	M18x1.5	271-161-1, 271-161-2, 271-161-3, 271-161-4, 271-161-5, 271-161-6
271-161A-JG	150	24	M20x1.5	271-161A-1, 271-161A-2, 271-161A-3, 271-161A-4

HAFFMAN
High Precision Tools
让测量更简单

数显指示表类
DIGITAL INDICATORS







诚信为本·科技立业
SINCERITY & TECHNOLOGY

蓝牙数显百分表

Bluetooth Digital Indicator(0.01)

GB/T

NEW

分辨力: 0.01mm
Resolution: 0.01mm

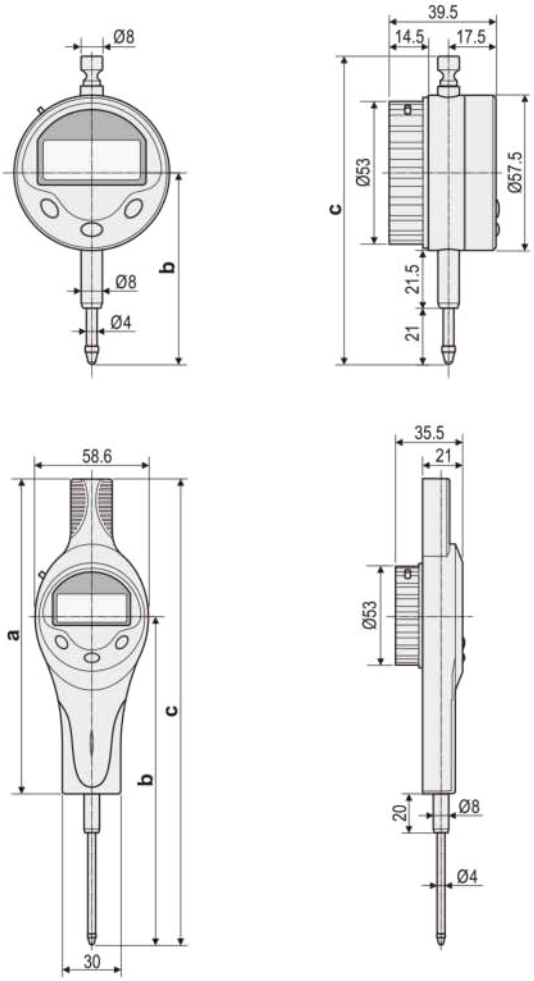

主要特点:

- 保留标准型ON/OFF键和多功能型M键两种数显指示表的所有功能
- 配有蓝牙后盖，可把测量数据传输到手机、平板和电脑
- 双电源供电，纽扣电池1.5V(表头)，CR2032 3V(后盖)
- 两种工作模式: 简易连接软件模式和HID配对键盘模式
- 具备OTA无线升级功能，功能定制升级，无需返厂

FEATURES

- Keep all functions of the digital display dial indicator
- Equipped with bluetooth back cover, it can transmit measurement data to mobile phones, tablets and computers
- Dual power supply, button battery 1.5V (meter head), CR2032 3V(rear cover)
- Two working modes: simple connection software mode and HID paired keyboard mode
- With OTA wireless upgrade function, function customization and upgrade, no need to return to the factory

货 号 Code NO.	测量范围 Measuring Range mm	精度 Accuracy mm	测量力 Measuring Force N	a mm	b mm	c mm
312-101-11MBT	0-12.7	0.03	≤2.2	—	71	114
312-102-11MBT	0-25	0.03	≤2.5	—	83.5	126.5
312-103-10M-SJ	0-30	0.03	≤2.5	122	128	179
312-105-10M-SJ	0-50	0.03	≤2.5	162	168	239

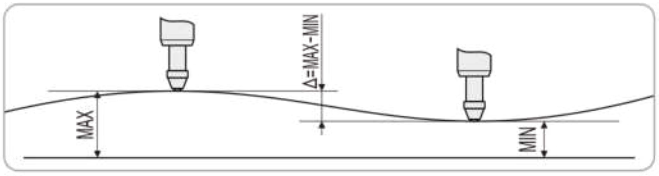

H

蓝牙数显千分表

Bluetooth Digital Indicator(0.001)

GB/T

NEW

分辨力:0.001mm
Resolution:0.001mm

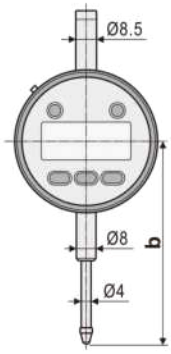

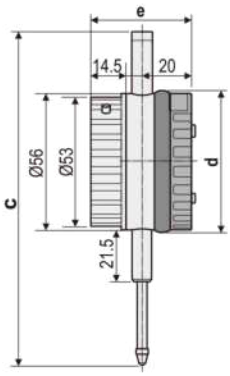

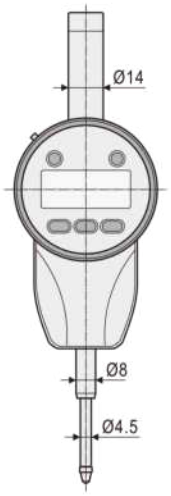

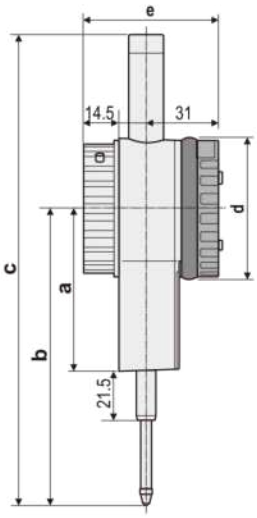

H

主要特点:

- 保留数显千分指示表的所有功能
- 配有蓝牙后盖，可把测量数据传输到手机、平板和电脑
- 双电源供电，纽扣电池CR1632 3V(表头)，CR2032 3V(后盖)
- 两种工作模式:简易连接软件模式和HID配对键盘模式
- 具备OTA无线升级功能，功能定制升级，无需返厂

FEATURES

- Keep all functions of the digital display dial indicator
- Equipped with bluetooth back cover, it can transmit measurement data to mobile phones, tablets and computers
- Dual power supply, button battery CR1632 3V(meter head), CR2032 3V(rear cover)
- Two working modes: simple connection software mode and HID paired keyboard mode
- With OTA wireless upgrade function, function customization and upgrade, no need to return to the factory

货 号 Code NO.	测量范围 Measuring Range mm	精度 Accuracy mm	测量力 Measuring Force N	a mm	b mm	c mm	d mm	e mm
314-100-20BT	0-6.5	0.003	≤1.5	—	57.5	101	47	44.5
314-101-25BT	0-12.7	0.005	≤2.2	—	70	123.5	59	41.5
314-102-25BT	0-25	0.007	≤2.5	63	118	190	59	56.5
314-105-25BT	0-50	0.01	≤2.5	105	184	282	59	56.5

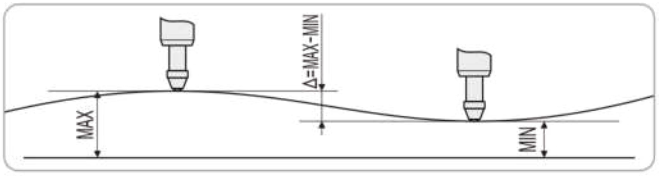

绝对原点数显百分指示表

Absolute Digital Indicator(0.01)

GB/T SPC 数据接口

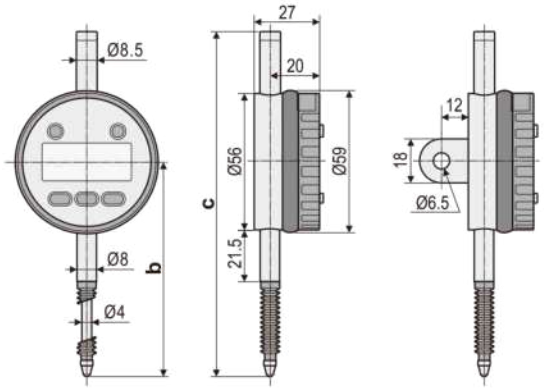

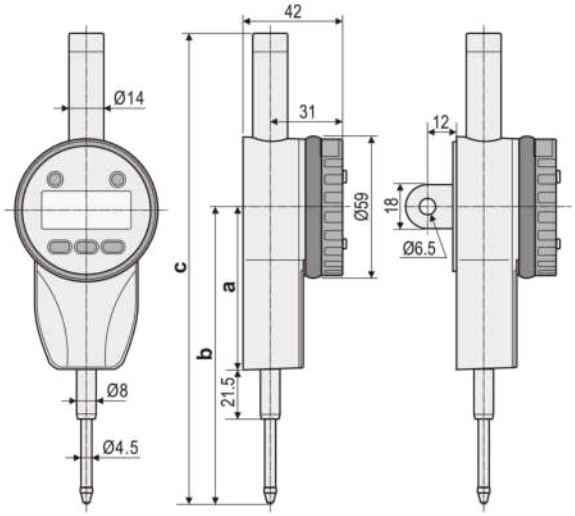

分辨力: 0.01mm
Resolution: 0.01mm

货号后加D为带耳后盖
D （With Back Lug）

采用3V锂电池供电
3V Lithium Battery

H

主要特点:

- 采用绝对原点定位技术，无响应速度限制，可靠性更高
- 任意位置清零
- 公英制转换
- 测量时，按下M键，进入HOLD状态，屏幕保留此时的测量值
- 记录连续测量过程中的最大值或最小值
- 记录连续测量的最大与最小值之差(△)，用于平面度和同轴度的测量
- 可以在测量过程中，根据设置的上下极限尺寸自动判定工件是否合格
- 以绝对方式测量，量表读出来的数据即为工件的实际尺寸
- 以相对方式测量，量表读出来的数据不是工件的实际尺寸，只是一个相对值
- 测量的数据可通过数据采集系统进行数据传输
- USB数据线插头和电池盖板都用螺钉紧固，保证连接更可靠

FEATURES

- Reliable absolutely locating system, no speed limited
- Zero-setting at any position
- Mm/inch conversion at any position
- Press M button, LCD holds the measuring result
- Hold the max or the minimum reading during measurement
- Tracing the balance between Max and Min value (△=MAX-MIN)
- TOL Setting can check if the item is regular
- Absolute zero measurements
- Relative zero measurements
- Measuring value can be transmitted to PC
- Screw USB interface and battery cover

货 号 Code NO.	测量范围 Measuring Range mm	精度 Accuracy mm	测量力 Measuring Force N	a mm	b mm	c mm
312-101-40	0-12.7	0.03	≤1.5	—	70	123.5
312-101-40C	0-12.7	0.03	≤1.5	—	88.5	142
312-102-40	0-25	0.03	≤2.2	63	118	190
312-105-40	0-50	0.03	≤2.2	105	184	282

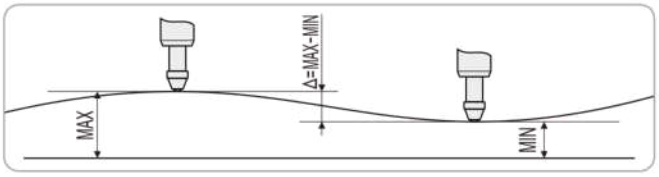

数显百分指示表

Digital Indicator(0.01)

GB/T SPC 数据接口

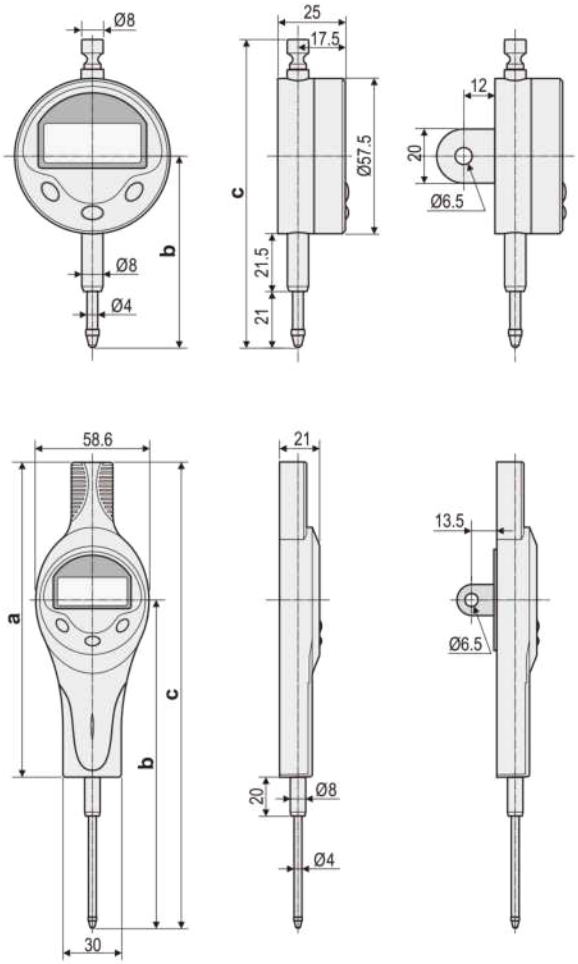

分辨力: 0.01mm
Resolution: 0.01mm

货号后加D为带耳后盖
D （With Back Lug）

H

主要特点:

标准型：**ON/OFF**键

- 任意位置清零
- 公英制转换
- 测量的数据可通过数据采集系统进行数据传输

多功能型：**M**键

- 任意位置清零
- 公英制转换
- 测量时，按下M键，进入HOLD状态，屏幕保留此时的测量值
- 记录连续测量过程中的最大值或最小值
- 记录连续测量的最大与最小值之差(△)，用于平面度和同轴度的测量
- 测量的数据可通过数据采集系统进行数据传输

FEATURES:

Standard Type: ON/OFF Key

- Zero-setting at any position
- Mm/Inch conversion at any position
- Measuring value can be transmitted to PC

Multi-Functional Type: M Key

- Zero-setting at any position
- Mm/inch conversion at any position
- Hold the digits on screen
- Hold the max or the minimum reading during measurement
- Tracing the balance between Max and Min value (△=MAX-MIN)
- Measuring value can be transmitted to PC

货 号 Code NO.	测量范围 Measuring Range mm	精度 Accuracy mm	测量力 Measuring Force N	a mm	b mm	c mm
312-101-11	0-12.7	0.03	≤2.2	—	71	114
312-102-11	0-25	0.03	≤2.5	—	83.5	126.5
312-103-10	0-30	0.03	≤2.5	122	128	179
312-105-10	0-50	0.03	≤2.5	162	168	239

多功能型请在货号后加 M. Item code with "M" if need multi-functional

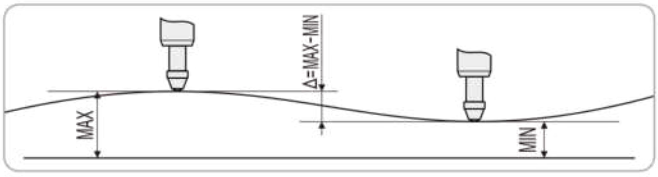

数显千分指示表

Digital Indicator(0.001)

GB/T SPC 数据接口

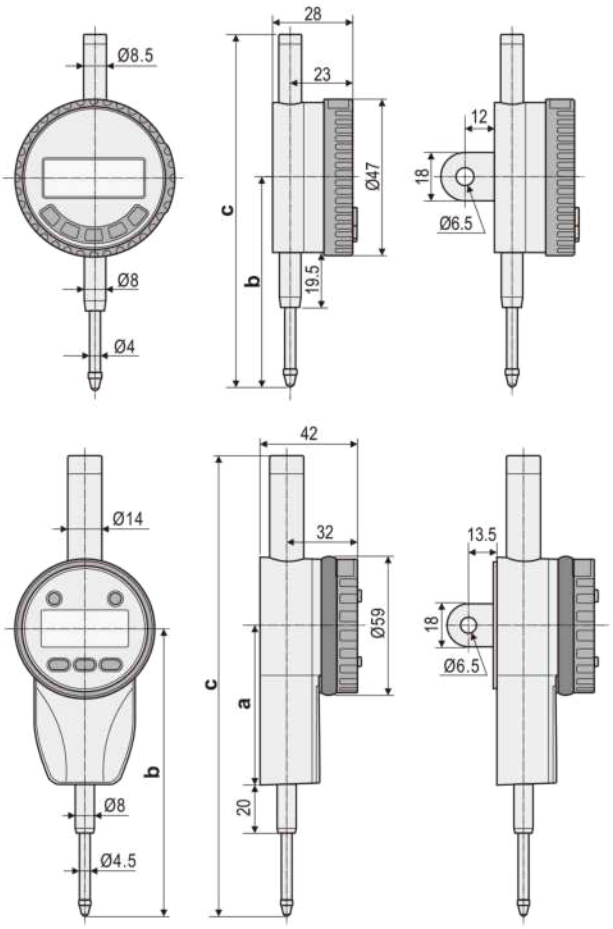

分辨力: 0.001mm
Resolution: 0.001mm

货号后加D为带耳后盖
D （With Back Lug）

H

主要特点:

- 任意位置清零
- 公英制转换
- 测量时，按下M键，进入HOLD状态，屏幕保留此时的测量值
- 记录连续测量过程中的最大值或最小值
- 记录连续测量的最大与最小值之差(△)，用于平面度和同轴度的测量
- 在测量过程中, 根据设置的上下极限尺寸可自动判定工件是否合格
- 对工件进行分段测量，测量结束后可以将多段数据进行累加
- 以绝对原点方式测量。测量前预置一个基本尺寸，测量时读出来的数据是工件的实际尺寸，即实际尺寸=预置基本尺寸+偏差
- 测量的数据可通过数据采集系统进行数据传输
- USB数据线插头和电池盖板都用螺钉紧固，保证连接更可靠
- 传感器采用玻璃栅，耐候性更强，精度更高，稳定性更好
- 数据处理速度更快，不容易乱数，适应性更好

FEATURES

- Zero-setting at any position
- Mm/inch conversion at any position
- Press M button, LCD holds the measuring result
- Hold the max or the minimum reading during measurement
- Tracing the balance between Max and Min value (△=MAX-MIN)
- TOL Setting can check if the item is regular
- Absolute and Increase measurement
- Set a value before measuring
- Data output port
- Screw locking the data output port and battery cover
- Glass sensor is more durable and accurate
- Data processing is faster and with better adaptability

货 号 Code NO.	测量范围 Measuring Range mm	精度 Accuracy mm	测量力 Measuring Force N	a mm	b mm	c mm
314-100-20	0-6.5	0.003	≤1.5	—	57.5	101
314-100-20C	0-6.5	0.003	≤1.5	—	70	113.5
314-101-25	0-12.7	0.005	≤2.2	—	70	123.5
314-101-25C	0-12.7	0.005	≤2.2	—	88.5	142
314-102-25	0-25	0.007	≤2.5	63	118	190
314-105-25	0-50	0.01	≤2.5	105	184	282

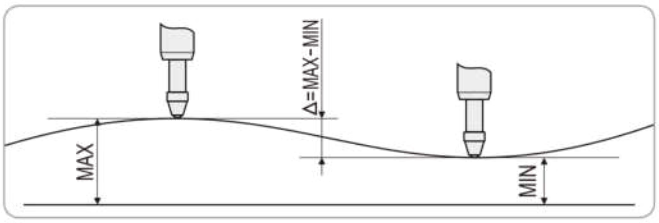

绝对原点数显千分指示表

Absolute Digital Indicator(0.001)

GB/T SPC 数据接口

分辨力: 0.0005mm/0.00001"
Resolution: 0.0005mm/0.00001"
采用可充电锂电池供电
With rechargeable lithium battery

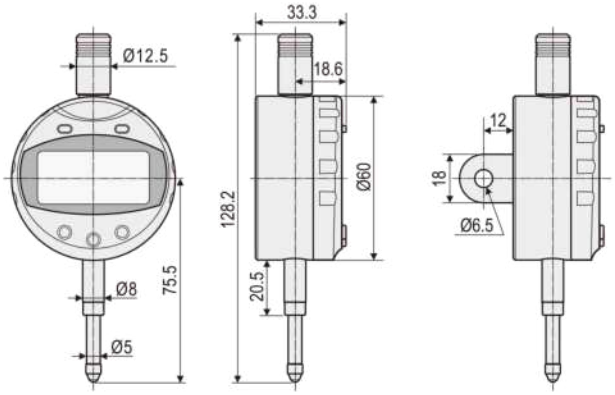

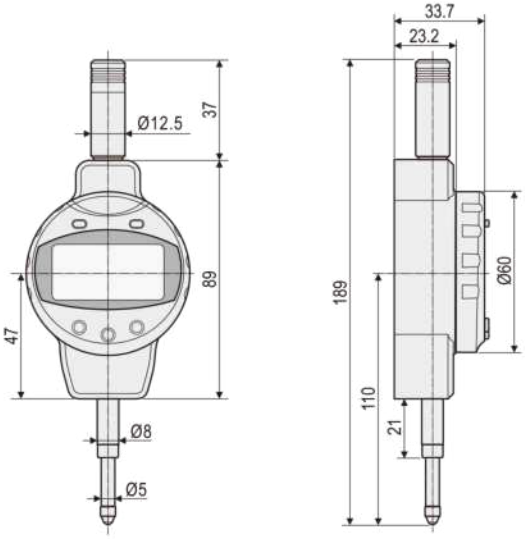

H

主要特点:

- 采用绝对编码光栅位移传感器技术, 无响应速度限制, 且数据处理更快更稳
- 采用内置可充电锂电池，连续监测时可以外接充电器长时间工作
- 任意位置清零
- 公英制转换
- 记录连续测量过程中的最大值或最小值
- 记录连续测量的最大与最小值之差(△)，用于平面度和同轴度的测量
- 在测量过程中, 根据设置的上下极限尺寸可自动判定工件是否合格
- 对工件进行分段测量，测量结束后可以将多段数据进行累加
- 以绝对原点方式测量。测量前预置一个基本尺寸，测量时读出来的数据是工件的实际尺寸，即实际尺寸=预置基本尺寸+偏差
- 测量的数据可通过数据采集系统进行数据传输

FEATURES

- Absolute coding grating displacement sensor technology, no limit for response speed, data processing is faster and more stable
- Build-in rechargeable lithium battery, external charger can be used for continuous monitoring
- Zero-setting at any position
- Mm/inch conversion at any position
- Hold the max or the minimum reading during measurement
- Tracing the balance between Max and Min value (△=MAX-MIN)
- TOL Setting can check if the item is regular
- Segment measurement of workpiece, accumulate segment date after measurement
- Original setting without repeated zero-setting. Preset one basic size before measurement, and the data read out during measurement is the actual size of the workpiece, that is, the actual size = preset basic size + deviation
- Measuring value can be transmitted to PC

货 号 Code NO.	测量范围 Measuring Range mm	精度 Accuracy mm	测量力 Measuring Force N
314-201WH	0-12.7	0.003	≤1.5
314-202WH	0-25	0.003	≤1.8

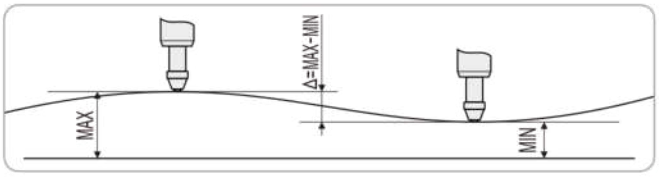

绝对原点数显比较仪
Absolute Digital Display Comparator

GB/T SPC

NEW

分辨力: 0.0005mm/0.00001"
Resolution: 0.0005mm/0.00001"
采用可充电锂电池供电
With rechargeable lithium battery

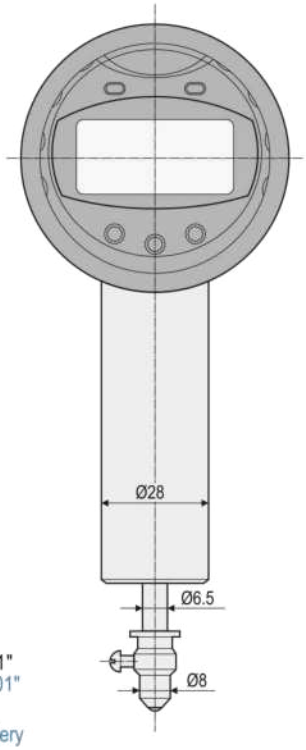

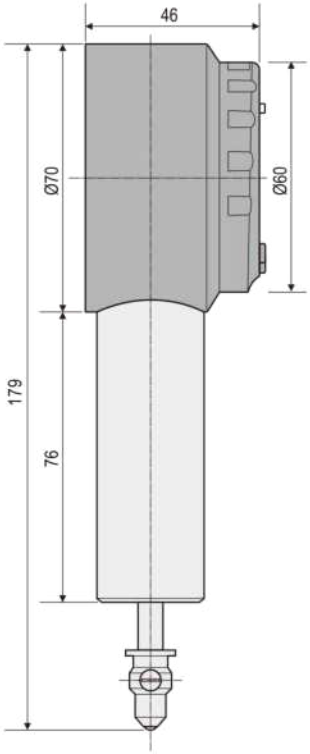

H

主要特点:

- 采用绝对编码光栅位移传感器技术, 无响应速度限制, 且数据处理更快更稳
- 采用内置可充电锂电池，连续监测时可以外接充电器长时间工作
- 任意位置清零
- 公英制转换
- 记录连续测量过程中的最大值或最小值
- 记录连续测量的最大与最小值之差(△)，用于平面度和同轴度的测量
- 在测量过程中, 根据设置的上下极限尺寸可自动判定工件是否合格
- 对工件进行分段测量，测量结束后可以将多段数据进行累加
- 以绝对原点方式测量。测量前预置一个基本尺寸，测量时读出来的数据是工件的实际尺寸，即实际尺寸=预置基本尺寸+偏差
- 测量的数据可通过数据采集系统进行数据传输

FEATURES

- Absolute coding grating displacement sensor technology, no limit for response speed, data processing is faster and more stable
- Build-in rechargeable lithium battery, external charger can be used for continuous monitoring
- Zero-setting at any position
- Mm/inch conversion at any position
- Hold the max or the minimum reading during measurement
- Tracing the balance between Max and Min value (△=MAX-MIN)
- TOL Setting can check if the item is regular
- Segment measurement of workpiece, accumulate segment date after measurement
- Original setting without repeated zero-setting. Preset one basic size before measurement, and the data read out during measurement is the actual size of the workpiece, that is, the actual size = preset basic size + deviation
- Measuring value can be transmitted to PC

货 号 Code NO.	测量范围 Measuring Range mm	精度 Accuracy mm	测量力 Measuring Force N
310-201WH	0-5	≤0.0014	≤1.5

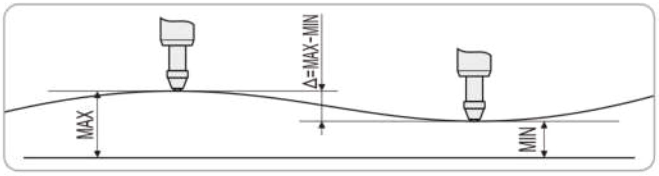

测深表
Depth Indicator

GB/T SPC 数据接口

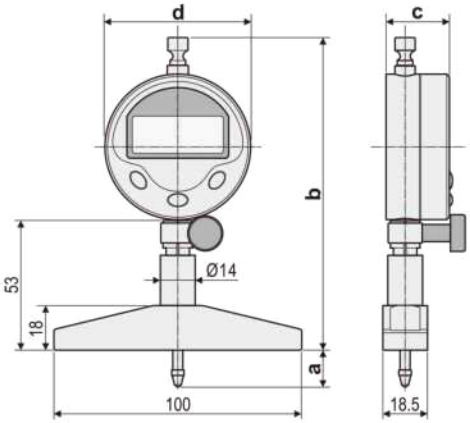

分辨力:0.01mm
Resolution:0.01mm

矩形表座(723-303)
Square Base

圆形表座(723-302)
Round Base

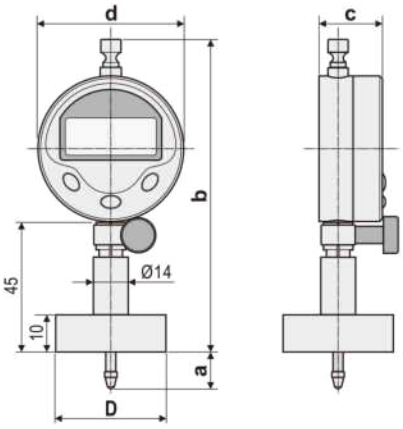

H

主要特点:
- 夹紧机构可靠快捷，外露的夹头更方便观察
- 加高的测量座，便于操作和观察
- 多种配置，适应不同用户的需求

FEATURES
- With a stable locking part
- Different bases for easy measuring
- With several sets for meeting different measuring needs

圆形表座参数
Specifications of Round Base

货 号 Code NO.	D
723-302A	Ø16
723-302B	Ø25
723-302	Ø40

A系列 A Series

货 号 Code NO.	表座货号 Base Code	指示表货号 Indicator Code	测量范围 Measuring Range mm	a mm	b mm	c mm	d mm
317A-312-101-11	723-303	312-101-11	0-12.7	13.5	125	25	Ø57.5
317A-312-102-11		312-102-11	0-25	26.5	125	25	Ø57.5
317A-314-101-25		314-101-25	0-12.7	13.5	134.5	26.5	Ø59
317A-314-102-25		314-102-25	0-25	26.5	188.5	42	—
317A-321-123-4		312-123-4	0-10	11.5	128	24.5	Ø56

注：上表未列出的，可按用户要求进行配置。
Note: Users can match the Base with Indicator according to measuring requirements.

B系列 B Series

货 号 Code NO.	表座货号 Base Code	指示表货号 Indicator Code	测量范围 Measuring Range mm	a mm	b mm	c mm	d mm
317B-312-101-11	723-302	312-101-11	0-12.7	13.5	125	25	Ø57.5
317B-312-102-11		312-102-11	0-25	26.5	125	25	Ø57.5
317B-314-101-25		314-101-25	0-12.7	13.5	134.5	26.5	Ø59
317B-312-102-25		314-102-25	0-25	26.5	188.5	42	—
317B-321-123-4		312-123-4	0-10	11.5	128	24.5	Ø56

组合式测深表

Indicator with Exchangeable Bases for Depth Measuring

GB/T SPC 数据接口

317-202T

分辨力: 0.01mm
Resolution: 0.01mm

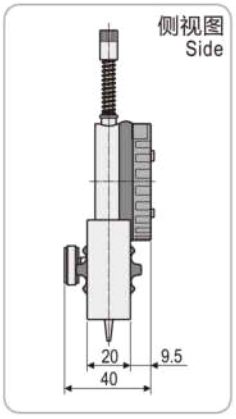

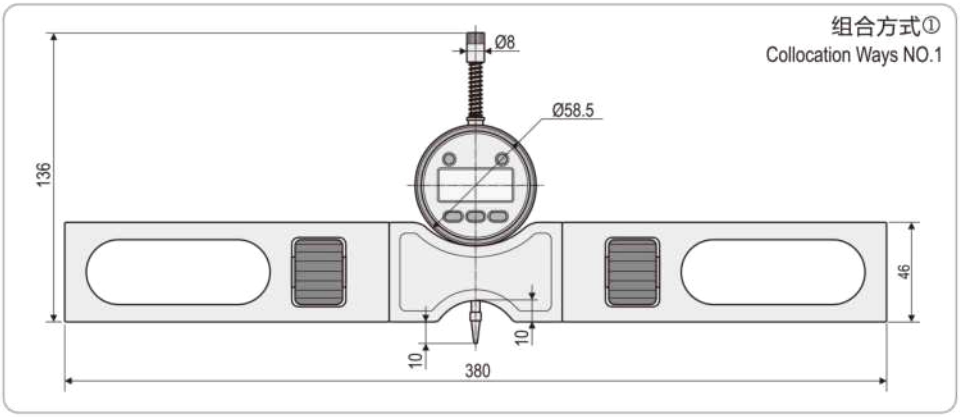

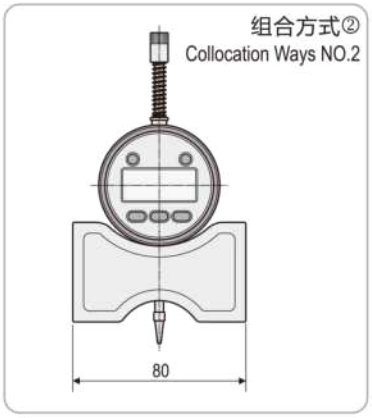

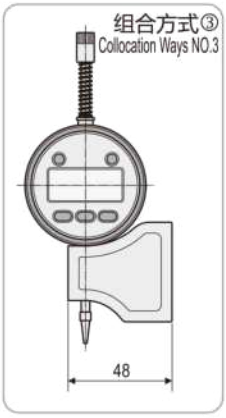

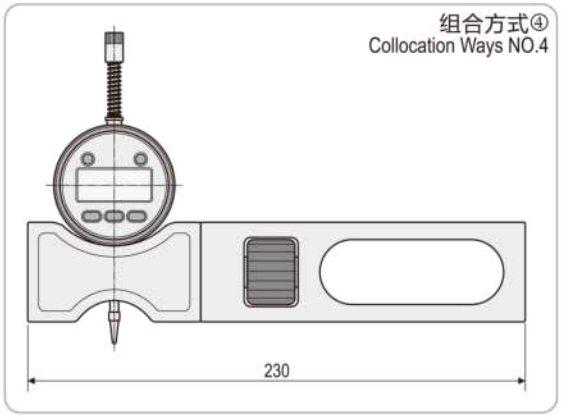

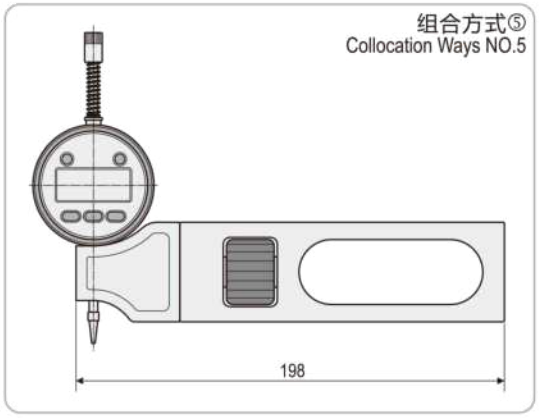

主要特点:

- 产品为高强度铝合金尺身，重量轻，便于携带
- 可以5种方式进行组合，适应不同环境的要求
- 拆装方便，快捷可靠
- 可配置不同量程的指示表，满足不同的需要
- 广泛用于土木、道路、桥梁、铁路、塔架、管道等工程建设中的测量

FEATURES

- Aluminium alloy frame, light weight for easy carry
- Can be used for 5 ways
- Easy to assemble and disassemble
- Can match with different measuring range indicators
- For measuring wood, earth, bridge, railway, tower frame, pipe etc.

H

胶囊壁厚测量仪
Thickness Indicator for Capsule

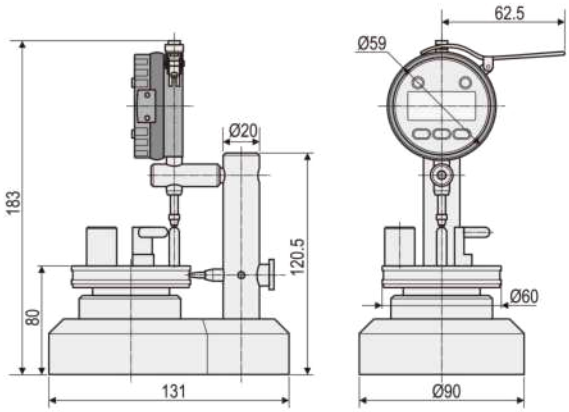

货 号 Code NO.	测量范围 Measuring Range mm	分辨力 Resolution mm	精 度 Accuracy mm
316-170	0-10	0.001	0.003

主要特点：
- 对医用胶囊的主要尺寸进行检测：顶部厚度、群部厚度、外径、长度
- 重量轻，体积小，占用空间小，可用于生产现场和进出货检验
- 操作和维护简单，无需专门培训即可使用
- 测量快捷，精度高
- 根据用户要求，定制不同的测头，以适用于不同型号的胶囊的尺寸测量

FEATURES
- Inspect the size of each side of the capsule, including the top thickness, group thickness, outer diameter and length
- Light weight, small size
- Simple operation and easy to maintenance
- Quick measurement, high accuracy
- Customized measuring tip is available

数显测厚表
Digital Thickness Gauge

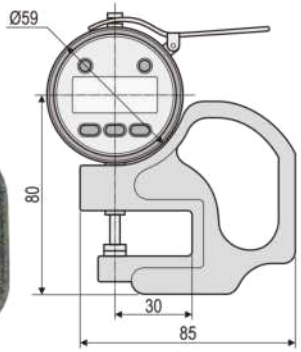

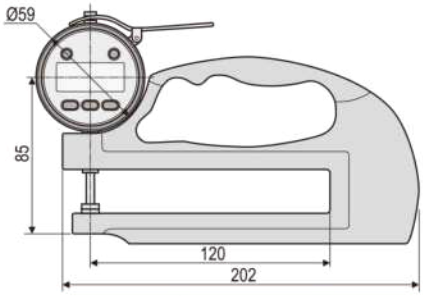

主要特点：
- 任意位置清零
- 应用范围广泛，有多种测量面
- 测量珠宝、皮革、金属薄板、纸张、薄膜、金属丝和类似材料的厚度
- 可快速寻找最大值和最小值

FEATURES
- Zero-setting at any position
- Universal purposes with many kinds of measuring faces
- Suited for measuring thickness of paper film, wire, sheet metal, jewelry, leather and similar materials
- Can fast trace MAX/MIN value

货 号 Code NO.	测量范围 Measuring Range mm	分辨力 Resolution mm	精 度 Accuracy mm	测量深度 Probe Depth mm
316-150	0-10	0.01	0.03	30
316-151	0-10	0.01	0.03	120
316-160A	0-10	0.001	0.009	30
316-161A	0-10	0.001	0.009	120

大量程内径表
Large-range Gauge for Inner Diameter

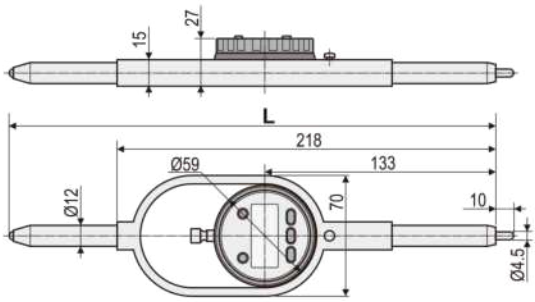

主要特点：
- 测量范围大，可测量大于250mm的内径或槽宽，量程约为10mm
- 数字显示，读数直观
- 可进行绝对测量，也可进行相对测量
- 测量杆可拆卸，便于收藏

FEATURES
- Wide measuring range (>250mm), measuring range (10mm)
- Digital display, read measuring result more directly and easily
- Absolute and relative measurement are available
- Removable measuring rod is easy to collect

货 号 Code NO.	测量范围 Measuring Range mm	分辨力 Resolution mm	精 度 Accuracy mm
318-201	0-10	0.01	0.02

使用方法：
1. 将量表的测量杆两端接触管壁或槽壁，移动活动测量头的一端，使显示值最大，此尺寸即为内经值或槽宽值
2. 相对测量: M=L+a; 绝对测量: M=a，将L值预置在指示表内，M：测量值， L：标定值， a :显示值

Operation instruction
1. Contact the two side of measuring rod with the pipe or groove, move the measuring point, the largest number on the display is the size of the workpiece
2. Relative measurement M=L+a; Absolute measurement M=a. Preset L value in the indicator
M: measured value, L: calibration value, a: display value

垂直数显指示表
Digital Indicator (Perpendicular type)

分辨力: 0.01mm
Resolution: 0.01mm

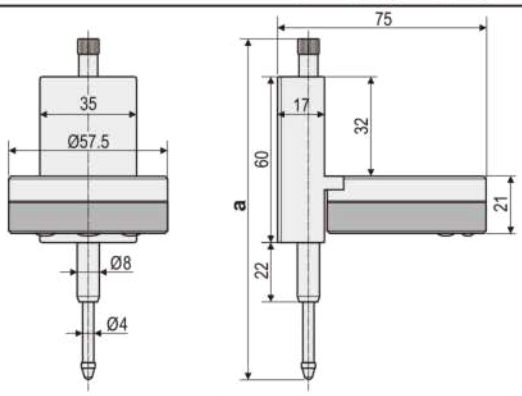

货 号 Code NO.	测量范围 Measuring Range mm	精度 Accuracy mm	测量力 Measuring Force N	a mm
312-231	0-10	0.02	≤1.5	115.5
312-232	0-20	0.03	≤2.2	125.5

主要特点：
- 任意位置清零
- 公英制转换
- 测量时，按下M键，进入HOLD状态，屏幕保留此时的测量值
- 记录连续测量过程中的最大值或最小值
- 记录连续测量的最大与最小值之差(△)，用于平面度和同轴度的测量
- 测量的数据可通过数据采集系统进行数据传输
- 显示器垂直于测量方向，便于水平测量时读数
- 大量用于汽车安全玻璃生产检测

FEATURES
- Zero-setting at any position
- Mm/inch conversion at any position
- Press M button, LCD holds the measuring result
- Hold the max or the minimum reading during measurement
- Tracing the balance between Max and Min value (△=MAX-MIN)
- Data output port
- Display LCD is perpendicular to the measuring tip, easy for reading
- For checking car's safety glass

电子塞规
Plug Gauge

GB/T SPC 数据接口

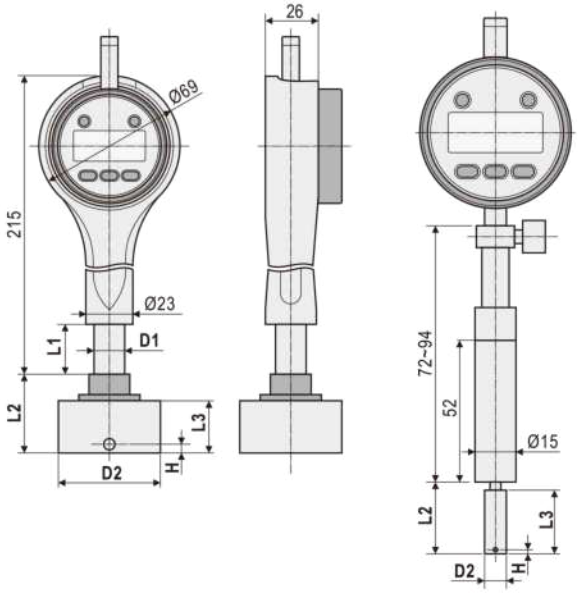

订货需知:

A. 测量尺寸依客户需求定制；

B. 定制尺寸为孔的最小极限尺寸，例如：工件尺寸Ø50D7(Ø50$^{+0.105}_{+0.08}$)，定制塞规尺寸为Ø50. 080；工件尺寸Ø35H7(Ø35$^{+0.025}_{0}$)，定制塞规尺寸为Ø35.000;

C. 配置的校对环规一般为孔的最小极限尺寸；特别要求可以依用户要求定制。

NOTE:

A. Customized measuring size;

B. Customized measuring range is the minimum size of hole. For example, if size of work piece is Ø50D7 (Ø50 $^{+0.105}_{+0.08}$), hen the customized size should be Ø50.080; if the size of work piece is Ø35H7 (Ø35 $^{+0.025}_{0}$), then the customized size should be Ø35.000.

C. Setted setting ring is with the minimum size, if need special size have to contact with us.

H

主要特点:

- 高精度，高重复性：精度0.002mm，重复性0.001mm
- 结实耐用，耐冲击
- 易使用，易保养
- 配用不同的测头，可以测量3-270mm的孔内径

FEATURES

- High precision: 0.002mm High repeatability: 0.001mm
- Durable and high shock resistance
- Easy to use and maintenance
- With different measuring tips, can measure 3-270mm hole

手柄和塞规头参数
Specifications of Bar & Plug Gauge Head

手柄型号 Bar code	L1	D1	链接螺纹M Screw thread size M
MH6-150-P	18	Ø10	M6X0.75
MH10-150-P	25	Ø15	M10X1
MH4-67-F	—	—	M3.5X0.35

塞规头型号 Plug gauge head code		D2	L2	L3	M	H	测量范围 Measuring Range um	适用手柄 Bar code
S型 适用于盲孔测量 S type blind hole measurement	S4	2.98≤D2<9	31.3	23.3	M3.5X0.35	1.5	100	MH4-67-F
	S6	7≤D2<20	33.5	25	M6X0.75	3	150	MH6-150-P
	S10	15≤D2<44	39	26	M10X1	3.5	200	MH10-150-P
	S10	44≤D2<70	39.5	26	M10X1	4	200	MH10-150-P
	S10	70≤D2<270	39.5	33	M10X1	4	200	MH10-150-P
D型 适用于通孔测量 D type through hole measurement	D4	2.98≤D2<9	35.8	27.8	M6X0.75	6	100	MH4-67-F
	D6	7≤D2<20	39.5	31	M10X1	9	150	MH6-150-P
	D10	44≤D2<70	45	32	M10X1	9.5	200	MH10-150-P
	D10	44≤D2<70	46	26	M10X1	10.5	200	MH10-150-P
	D10	70≤D2<270	51	33	M6X0.75	15	200	MH10-150-P
FB型 适用于浅盲孔测量 FB type shallow blind hole measurement	FB6	7≤D2<16	31.1	22.6	M10X1	0.6	150	MH6-150-P
	FB10	15≤D2<44	39	26	M10X1	1.1	150	MH10-150-P
	FB10	44≤D2<70	39	25.5	M10X1	1.1	150	MH10-150-P
	FB10	70≤D2<150	39	32.5	M10X1	1.1	150	MH10-150-P

大量程数显深度表
Large-range Digital Depth Indicator

GB/T SPC 数据接口

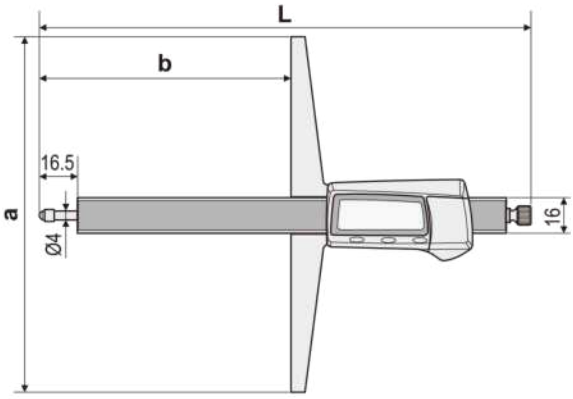

分辨力: 0.01mm
Resolution: 0.01mm

货 号 Code NO.	测量范围 Measuring Range mm	精度 Accuracy mm	L mm	a mm	b mm
317-405-10	0-50	0.03	155	150	53
317-410-10	0-100	0.03	205	150	103
317-415-10	0-150	0.03	255	150	153
317-420-10	0-200	0.03	305	150	203
317-405-10A	0-50	0.03	155	200	53
317-410-10A	0-100	0.03	205	200	103
317-415-10A	0-150	0.03	255	200	153
317-420-10A	0-200	0.03	305	200	203

主要特点:
- 体积小, 重量轻, 量程大
- 操作简单，定位准确
- 测量操作可单手完成
- 通过夹具,可作为测厚表使用

FEATURES
- Small size, light in weight and large measuring range;
- Simple operation and accurate positioning;
- Measurement can be done by one hand;
- Through the fixture, it can be used as a thickness gauge.

数显内径尺
Digital Display Inner Diameter Caliper

GB/T SPC 数据接口

NEW

H

分辨力: 0.01mm
Resolution: 0.01mm

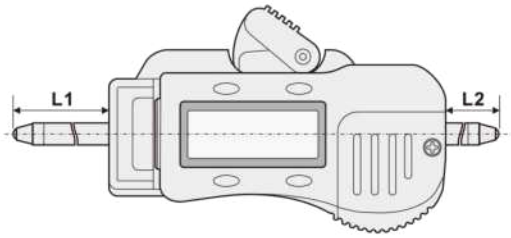

主要特点:
- 选配不同测量杆，可测量100mm~200mm范围(行程10mm)
- 针对不同的测量范围，配置不同的校对装置
- 便于简单快捷地测量内尺寸
- 带预置数功能

FEATURES
- Different measuring rods can be selected to measure the range of 100-200mm(stroke of 10mm)
- Configure different calibration devices for different measuring ranges
- It is convenient to measure the internal dimension simply and quickly
- Preset any reading at any position

货 号 Code NO.	测量范围 Measuring Range mm	精度 Accuracy mm	L1 mm	L2 mm
113-410-1	100-110	±0.03	10	20
113-410-2	110-120	±0.03	20	20
113-410-3	120-130	±0.03	30	20
113-410-4	130-140	±0.03	40	20
113-410-5	140-150	±0.03	50	20
113-410-6	150-160	±0.03	20+40	20
113-410-7	160-170	±0.03	20+50	20
113-410-8	170-180	±0.03	30+50	20
113-410-9	180-190	±0.03	40+50	20
113-410-10	190-200	±0.03	50+50	20

单宽量面数显卡表
Digital Thickness Indicator with Single Large-sized Measuring Face

S/STL hardened | SPC 数据接口

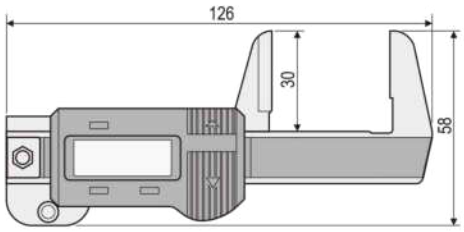

货 号 Code NO.	测量范围 Measuring Range mm	分辨力 Resolution mm	精 度 Accuracy mm
315-401	0-30	0.01	0.03

主要特点:
- 轻巧便携
- 使用方便
- 高效率
- 常用于测量较小工件尺寸
- 带电源开关
- 任意位置测量单位转换
- 任意位置清零

FEATURES
- Light weight
- Easy to operate
- High efficiency
- Used for measuring dimensions of small workpiece
- Power on/off
- Mm/inch conversion at any position
- Zero-setting at any position

矩形数显指示表
Rectangle Digital Indicator

GB/T | SPC 数据接口

H

分辨力: 0.01mm
Resolution: 0.01mm

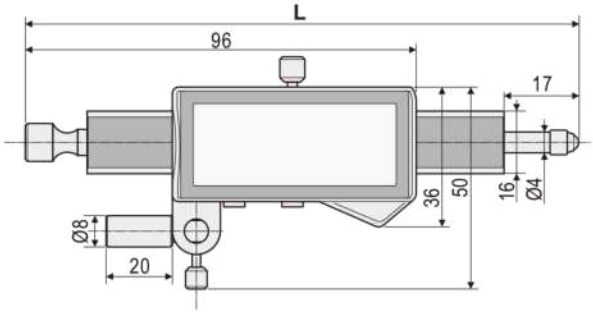

主要特点:
- 装夹结构方便可靠
- 带电源开关
- 公英制转换
- 任意位置清零
- 可通过USB数据线和数据适配器进行数据传输
- 采用绝对原点技术，不易乱数，适应性更广

FEATURES
- The clamping structure is convenient and reliable
- Power on/off
- Mm/inch conversion
- Zero-setting at any position
- Data transmission via USB data cable and data adapter
- The absolute origin technology is adopted, which is not easy to be disordered and has wider adaptability

货 号 Code NO.	测量范围 Measuring Range mm	精度 Accuracy mm	测量力 Measuring Force N	L mm
311-101-40	0-10	0.02	≤1.5	124
311-103-40	0-30	0.03	≤2.2	144
311-105-40	0-50	0.03	≤2.5	164
311-108-40	0-80	0.03	≤2.5	194
311-110-40	0-100	0.03	≤2.5	214
311-115-40	0-150	0.03	≤2.5	264
311-200-40	0-200	0.03	≤2.5	314

数显卡表
Digital Thickness Gauge

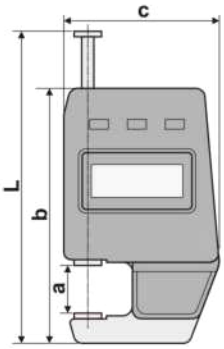

货 号 Code NO.	测量范围 Measuring Range mm	分辨力 Resolution mm	精 度 Accuracy mm	L mm	a mm	b mm	c mm
315-101	0-15	0.01	0.03	102.6	15.8	83.5	51
315-102	0-25	0.01	0.03	133	26	104	61

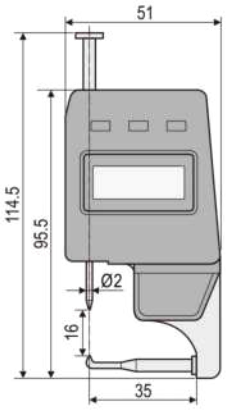

货 号 Code NO.	测量范围 Measuring Range mm	分辨力 Resolution mm	精 度 Accuracy mm
315-181	0-15	0.01	0.03

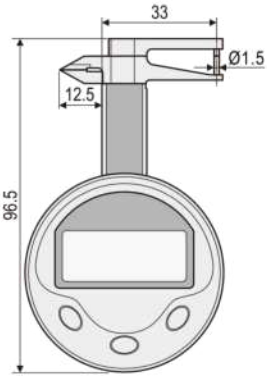

货 号 Code NO.	测量范围 Measuring Range mm	分辨力 Resolution mm	精 度 Accuracy mm
315-342	0-25	0.01	0.03

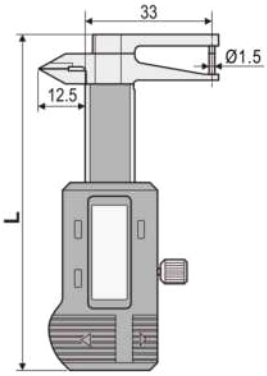

货 号 Code NO.	测量范围 Measuring Range mm	分辨力 Resolution mm	精 度 Accuracy mm	L mm
315-240	0-15	0.01	0.03	77
315-241	0-25	0.01	0.03	87

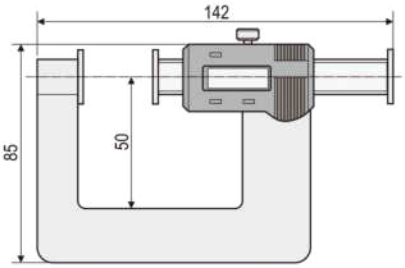

货 号 Code NO.	测量范围 Measuring Range mm	分辨力 Resolution mm	精 度 Accuracy mm
315-303	0-35	0.01	0.03

主要特点:
- 轻巧便携
- 使用方便
- 高效率
- 常用于测量较小工件尺寸

FEATURES
- Light weight
- Easy to operate
- High efficiency
- Used for measuring dimensions of small workpiece

H

在线测量数显方表
Digital Gauge for Diameter of Wire

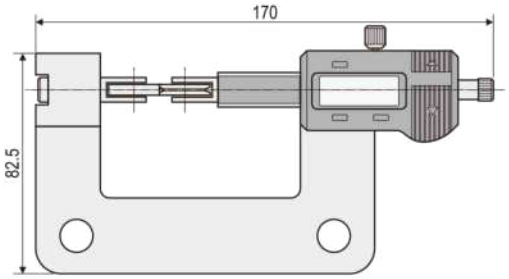

主要特点:
- 高精度、高耐磨可滚动检测轮
- 专用于线材、型材挤出成型时的连续在线测量
- 任意位置清零，便于相对测量与绝对测量转换
- 任意位置公制与英制转换

FEATURES
- With high-precision and durable rolling wheels
- Used for continuously on-line measuring wire and molding materials on production
- Zero-setting at any position, convenient for relative and absolute measure conversion
- Mm/inch conversion at any position

货 号 Code NO.	测量范围 Measuring Range mm	分辨力 Resolution mm	精 度 Accuracy mm
316-143	0-30	0.01	0.03

H

数显测厚表
Digital Thickness Gauge

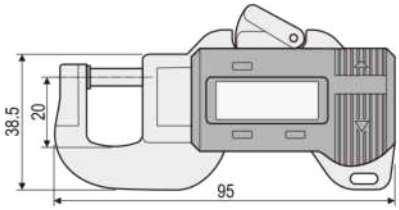

主要特点:
- 测量珠宝、皮革、金属薄板、纸张、薄膜、金属丝和类似材料的厚度

FEATURES
- Suited for measuring thickness of paper, film, wire, sheet metal, jewelry, leather and similar materials

货 号 Code NO.	测量范围 Measuring Range mm	分辨力 Resolution mm	精 度 Accuracy mm
316-280	0-12	0.01	0.03

货 号 Code NO.	测量范围 Measuring Range mm	分辨力 Resolution mm	精 度 Accuracy mm
316-281	0-25.4	0.01	0.03

HAFFMAN
High Precision Tools
让测量更简单

I

机械指示表类
DIAL INDICATORS







诚信为本·科技立业
SINCERITY & TECHNOLOGY

8 钻防震千分表
Dial Indicator with 8 Rubies

GB/T

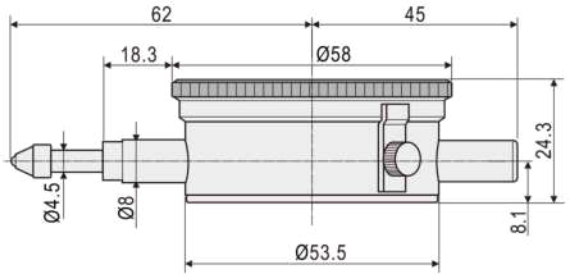

货号后加D为带耳后盖
D (With Back Lug)

货 号 Code NO.	分度值 Readings mm	测量范围 Measuring Range mm	表盘读数 Dial reading	表圈外径 Ring diameter mm
320-162	0.001	0-1	0-200	Ø58
320-162D	0.001	0-1	0-200	Ø58

百分表
Dial Indicator

GB/T

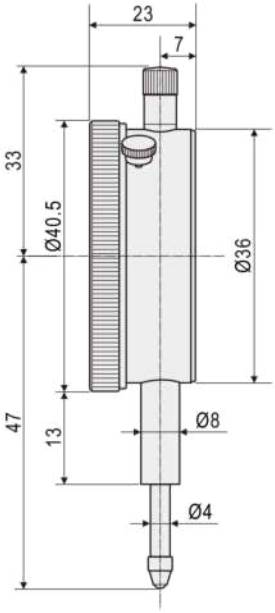

货 号 Code NO.	分度值 Readings mm	测量范围 Measuring Range mm	表盘读数 Dial reading	表圈外径 Ring diameter mm
321-111	0.01	0-3	0-100	Ø40.5
321-113	0.01	0-5	0-100	Ø40.5

8mm 量程百分表
Dial Indicator (8mm)

GB/T

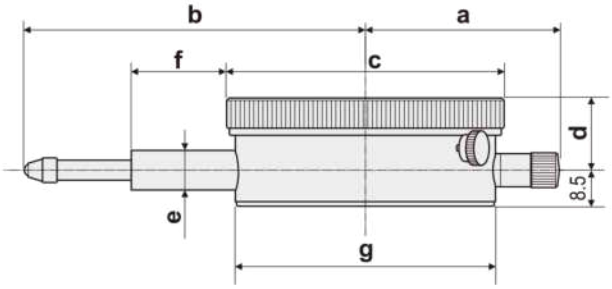

货 号 Code NO.	分度值 Readings mm	测量范围 Measuring Range mm	表盘读数 Dial reading	表圈外径 Ring diameter mm	a mm	b mm	c mm	d mm	e mm	f mm	g mm	备 注 Remark
321-115	0.01	0-8	0-100	Ø40.5	33	50.7	Ø40.5	16	Ø8	13	Ø35	LB231
321-231	.001"	0-.25"	0-100	Ø2.362"	40	85.5	Ø60	16	Ø3/8"	17.6	Ø53	LB260.7
321-232	.0005"	0-.25"	0-100	Ø2.362"	40	72	Ø60	16	Ø3/8"	17.6	Ø53	LB262
321-211	.001"	0-.25"	0-100	Ø1.614"	33.8	49	Ø41	13	Ø3/8"	13	Ø35	LB260.4
321-235-1	.001"	0-1.0"	0-100	Ø2.362"	40	60	Ø60	16	Ø3/8"	17.6	Ø53	LB260.4A

10mm 6 钻防震百分表
Dial Indicator with 6 Rubies (10mm)

GB/T

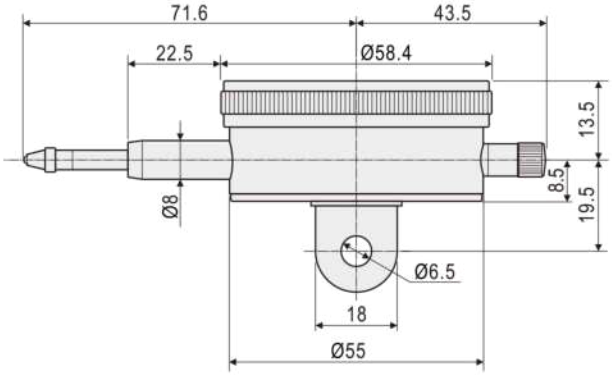

货号后加D为带耳后盖
D (With Back Lug)

货 号 Code NO.	分度值 Readings mm	测量范围 Measuring Range mm	表盘读数 Dial reading	表圈外径 Ring diameter mm
321-123TW	0.01	0-10	0-100	Ø58.4

I

10mm 量程百分表
Dial Indicator(10mm)

GB/T

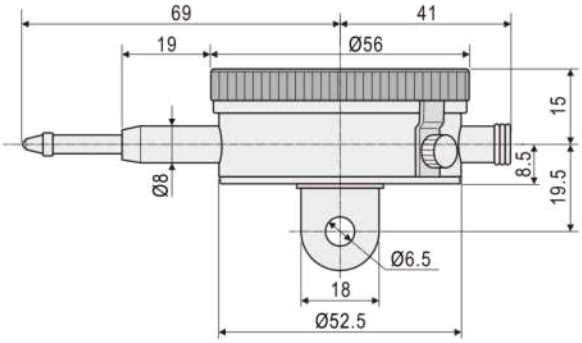

货号后加D为带耳后盖
D （With Back Lug）

货 号 Code NO.	分度值 Readings mm	测量范围 Measuring Range mm	表盘读数 Dial reading	表圈外径 Ring diameter mm
321-123-4	0.01	0-10	0-100	Ø56

大量程百分表
Large Range Dial Indicator

GB/T

货号后加D为带耳后盖
D （With Back Lug）

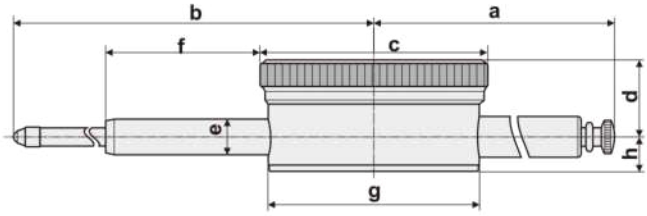

货 号 Code NO.	分度值 Readings mm	测量范围 Measuring Range mm	表盘读数 Dial reading	表圈外径 Ring diameter mm	a mm	b mm	c mm	d mm	e mm	f mm	g mm	h mm
321-132	0.01	0-20	0-100	Ø58	37.5	81.6	Ø58	16.3	Ø8	17.5	Ø53.5	8.4
321-133	0.01	0-25	0-100	Ø58	37.5	81.6	Ø58	16.3	Ø8	17.5	Ø53.5	8.4
321-134	0.01	0-30	0-100	Ø58	37.5	86.8	Ø58	19.2	Ø8	19.5	Ø53.5	8.0
321-141	0.01	0-50	0-100	Ø58	108.3	126.2	Ø58	19.2	Ø8	39.5	Ø53.5	8.0
321-142	0.01	0-80	0-100	Ø58	138.4	168.4	Ø58	19.2	Ø8	51.3	Ø53.5	8.0
321-143	0.01	0-100	0-100	Ø78	167.6	207.8	Ø78	19.8	Ø10	60.8	Ø69	9.0
321-223	.001"	0-.25"	0-100	Ø2.362"	40	81.5	Ø60	16	Ø3/8"	17	Ø53	
321-233	.001"	0-.5"	0-100	Ø2.362"	40	68	Ø60	16	Ø3/8"	17	Ø53	
321-234	.0005"	0-.5"	0-100	Ø2.362"	40	68	Ø60	16	Ø3/8"	17	Ø53	
321-234-1	.001"	0-.5"	0-100	Ø2.165"	47.5	18.5	Ø56	16	Ø3/8"	15	Ø50	
321-235	.001"	0-1.0"	0-100	Ø2.362"	40	81.5	Ø60	16	Ø3/8"	17	Ø53	
321-236	.0005"	0-1.0"	0-100	Ø2.362"	40	81.5	Ø60	16	Ø3/8"	17	Ø53	
321-237	.001"	0-2.0"	0-100	Ø2.362"	124	142	Ø60	16	Ø3/8"	44	Ø53	
321-237-1	.001"	0-2.0"	0-100	Ø2.362"	124	142	Ø60	16	Ø3/8"	44	Ø53	

杠杆齿轮比较仪
Mechanical Dial Comparator

GB/T

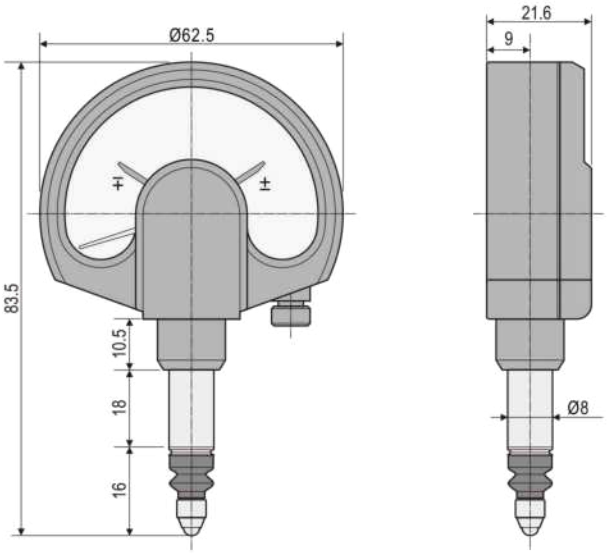

主要特点:
- 高准确度（7钻）
- 防震
- 防水防尘
- 读数方便
- 有微调机构
- 快门线提升测轴

FEATURES
- High accuracy(Rubies 7)
- Shockproof
- Waterproof、dustproof
- Easy to read
- Easy fine adjustment
- Shutter line lift the measuring spindle

货 号 Code NO.	分度值 Readings mm	测量范围 Measuring Range mm	表盘读数 Dial reading
320-105A	0.001	±0.05	50-0-50

杠杆指示表
Dial Test Indicator

GB/T

主要特点:
- 可以准确方便的测量狭长和凹进面,及难以测量的内外直径尺寸
- 采用特殊装置实现测量方向的自动换向
- 采用8钻，具有高灵敏度和快速响应
- 多种材料测头供选择（硬质合金、淬硬钢、宝石）
- Ø6h7的夹环柄为选购件

FEATURES
- Performs easy and accurately measurement of narrow or recessed areas and inside and outside diameters that measured difficultly
- Special structure for automatic reversal of measuring direction
- High-sensibility and quick-response (8 jeweled)
- Contact points made of various materials are optional (carbide, steel hardened,jewel)
- Stem of clamp ring (Ø6h7) is optional

货 号 Code NO.	分度值 Readings mm	测量范围 Measuring Range mm	表盘读数 Dial reading	表圈外径 Ring diameter mm	测杆长 Measuring Spindle mm	备 注 Remark
322-001	0.002	0-0.2	0-100-0	Ø40 Ø32	14.7	Lb411
322-221	0.01	0-0.8	0-40-0	Ø38 Ø30	15.7	LB433H
322-301	.0001"	0-.008"	0-4-0	Ø38 Ø32	14.7	Lb460
322-311	.0005"	0-.03"	0-15-0	Ø38 Ø32	15.7	Lb470

护桥式内径指示表
Ball Type Dial Bore Indicator

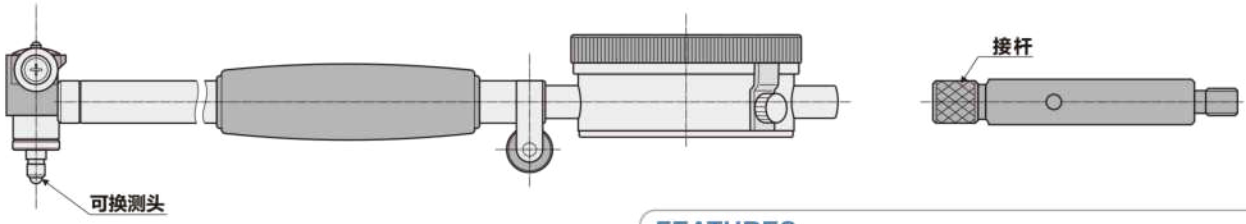

主要特点：

- 适用于比较法测量工件的内径
- 本系列内径指示表备有优良的导向护桥，自定心准确可靠
- 测量头一端为活动测头，另一端为根据被测孔径不同而变换的可换测头
- 用户根据需要对配置的指示表有多种选择

FEATURES

- The bore gauges are used to measure internal dimensions of work pieces by comparative method
- These series bore gauges are equipped with a good guiding protective bridge which can be self-centering exactly and reliably
- The moveable anvil on one side and an interchangeable on another side , which serves for setting the bore diameters
- There are many types of dial indicators for choice according to the needs of customers

货 号 Code NO.	测量范围 Measuring Range mm	测量深度 Measuring Depth mm/in	备 注 Remark
328-116P	Ø6 -Ø10	40	A×9 D×1
328-131P	Ø10-Ø18	100	A×9 B×1 D×1
328-132P	Ø18-Ø35	125	A×7
328-133P	Ø35-Ø50	150	A×3
328-134P	Ø50-Ø160	150	A×5 C×1
328-135P-1	Ø160-Ø250	400	A×5
328-136P-1	Ø250-Ø450	400	A×5 C×1
328-150P	Ø0.24"-Ø0.4"	1.8"	A×9 D×1
328-151P	Ø0.4"-Ø0.7"	4"	A×9 B×1 D×1
328-152P	Ø0.7"-Ø1.5"	5"	A×8
328-153P	Ø1.4"-Ø2.4"	6"	A×6 B×4
328-154P	Ø2"-Ø6"	6"	A×11 B×4 C×1
328-155P-1	Ø6"-Ø10"	16"	A×6 B×6 C×1
328-156P-1	Ø10"-Ø16"	16"	A×6 B×6 C×2

备注栏中的ABCD符号的内容如下所示： **A**:可换测头 **B**:调整垫圈 **C**:接杆 **D**:拆装工具
Please see the following A B C for in the above table:
A: Interchangeable contact point **B**: Adjustable Washers **C**: Extension Rod **D**: Disassembly tool

选配指示表类型 The following Dial & Digital gauges are optional

配表类型 Type	表型号 Model No.	读数值×量程 Reading×Range	备 注 Remark
A	LB211	0.01×3	表盘直径Face Diameter Ø40 货号NO.321-111
B	LB217	0.01×3	表盘直径Face Diameter Ø60 货号NO.321-111-2
C	LB224.5	0.01×5	表盘直径Face Diameter Ø40 货号NO.321-130
D	LB262	0.0005" ×0.25"	表盘直径 Face Diameter Ø2.362" 货号NO.321-232
E	LB110	0.001× ±0.05	表盘直径 Face Diameter Ø2.362" 货号NO.320-105A
F	LB112	0.001×1	表盘直径 Face Diameter Ø55 货号NO.320-162
G	SXB254A	0.01/0.0005" 6.5/0.28"	M型数显表 Digital gauge Type M
H	SXB253A	0.01/0.0025" 12.7/0.5"	M型数显表 Digital gauge Type M
J	SXB153A	0.001/0.00005" 6.5/0.25"	M型数显表 Digital gauge Type M
K	SXB152A	0.001/0.00005" 12.7/0.5"	M型数显表 Digital gauge Type M

定货号的最后一位的**X**为该内径表所配的指示表类型，如：若购测量范围 **Φ10-Φ18mm** 的内径表，选配**E**型，**0.001mm×±0.05mm** 的指示表，则该内径表的定货号为：**328-131E**。

" X " at the end of Order No. stands for a type of Dial gauge coming with Dial Bore Gauge. For example , if one purchases Dial Bore Gauge (Ø10-Ø18mm) and choose type E as Dial gauge (E: 0.001 mm × ±0.05mm), Order number for this dial bore gage is 328-131E.

备注：如需数显内径量表和蓝牙数显内径量表，请技术咨询订购。
Remarks: If you need digital display inner diameter gauge and Bluetooth digital display inner diameter gauge, please order through technical consultation.

涨簧式内径指示表
Expanding Head Dial Bore Indicator

GB/T

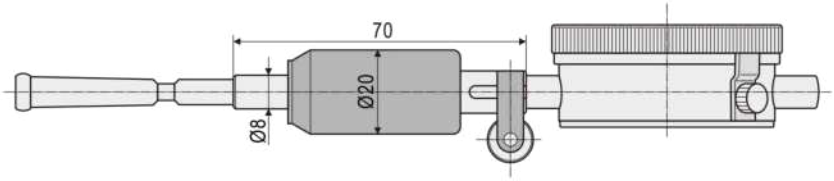

测头尺寸及测量范围
Anvil Diameter And Measuring Range

测头尺寸 Anvil Diameter mm	测量范围 Measuring Range mm/inch	最大测量深度 The Max Measuring Depth mm
Ø1.00	0.95-1.10	13
Ø1.10	1.05-1.20	13
Ø1.20	1.15-1.35	13
Ø1.35	1.30-1.50	13
Ø1.50	1.45-1.65	13
Ø1.75	1.65-1.95	17
Ø2.00	1.85-2.20	17
Ø2.25	2.15-2.45	17
Ø2.50	2.35-2.70	25
Ø2.75	2.60-2.95	25
Ø3.00	2.85-3.20	25
Ø3.25	3.10-3.45	25
Ø3.50	3.35-3.70	25
Ø3.75	3.60-3.95	25
Ø4.00	3.85-4.20	25
Ø4.50	4.10-4.70	41
Ø5.00	4.60-5.20	41
Ø5.50	5.10-5.70	41
Ø6.00	5.60-6.20	41
Ø6.50	6.10-6.70	41
Ø7.00	6.60-7.20	41
Ø8.00	7.10-8.30	50
Ø9.00	8.10-9.40	50
Ø10.00	9.30-10.50	50

主要特点:
- 附有定深套，测量方便，快速
- 测头部为球状，能自动自定心测量
- 本产品属弹性测头, 经过尖端带锥度的探针推动指示表量杆的精度测量仪器

FEATURES
- With location depth attachment, easily and quickly measure
- The tip of anvil is spherical so that can be self-centeringmeasuring the bore
- The product is precision measuring instrument. The spring head push spindle of dial gauge to movement via the pin with taper point end

货 号 Code NO.	测量范围 Measuring Range mm/inch	最大测量深度 The Max Measuring Depth mm	采用标准 Used standard	备 注 Remark
328-121X	Ø1.0-Ø2.0	13.17	JB	LB551A
328-122X	Ø2.0-Ø3.5	17.25	JB	LB552A
328-123X	Ø3.5-Ø6.0	25.41	JB	LB553A
328-126X	Ø6.0-Ø10.0	41.50	JB	LB554A

定货号的最后一位的**X**为该内径表所配的指示表类型，如：若购测量范围 **Φ10-Φ18mm** 的内径表，选配**E**型，**0.001mm×±0.05mm** 的指示表，则该内径表的定货号为：**328-131E**。

" X " at the end of Order No. stands for a type of Dial gauge coming with Dial Bore Gauge. For example , if one purchases Dial Bore Gauge (Ø10-Ø18mm) and choose type E as Dial gauge (E: 0.001 mm × ± 0.05mm), Order number for this dial bore gage is 328-131E.

选配指示表类型 The following Dial & Digital gauges are optional

配表类型 Type	表型号 Model No.	读数值×量程 Reading × Range	备 注 Remark
A	LB211	0.01 × 3	表盘直径 Face Diameter Ø40 货号NO.321-111
B	LB217	0.01 × 3	表盘直径 Face Diameter Ø60 货号NO.321-111-2
C	LB224.5	0.01 × 5	表盘直径 Face Diameter Ø40 货号NO.321-130
D	LB262	0.0005" × 0.25"	表盘直径 Face Diameter Ø2.362" 货号NO.321-232
E	LB110	0.001 × ± 0.05	表盘直径 Face Diameter Ø2.362" 货号NO.320-105A
F	LB112	0.001 × 1	表盘直径 Face Diameter Ø55 货号NO.320-162
G	SXB254A	0.01/0.0005" 6.5/0.28"	M型数显表 Digital gauge Type M
H	SXB253A	0.01/0.0025" 12.7/0.5"	M型数显表 Digital gauge Type M
J	SXB153A	0.001/0.00005" 6.5/0.25"	M型数显表 Digital gauge Type M
K	SXB152A	0.001/0.00005" 12.7/0.5"	M型数显表 Digital gauge Type M

机械测厚表
Dial Thickness Gauge

325-101

325-181

325-102

主要特点:

- 测量珠宝、皮革、金属薄板、纸张、薄膜、金属丝和类似材料的厚度

FEATURES

- Suited for measuring thickness of paper, film, wire, sheet metal, jewelry, leather and similar materials.

货 号 Code NO.	分度值 Graduation mm	测量范围 Measuring Range mm	备 注 Remarks
325-181	0.1	0-10	LB637上下测头为针状 Needle measuring point
325-101	0.1	0-10	LB638 凸形玻璃、黑色圆锥形表圈 Protuberant glass, black taper plastic ring
325-102	0.1	0-20	LB643

HAFFMAN
High Precision Tools
让测量更简单

J

其它量具量仪
MISCELLANEOUS





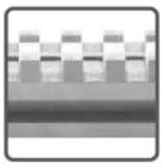

诚信为本·科技立业
SINCERITY & TECHNOLOGY

横式数显标尺
Digital Scale Units(H-Type)

GB/T | S/STL hardened | SPC 既福祖口

量程>500mm用此罩壳
Ranges over 500mm is fit for this cover

分辨力:0.01mm
Resolution:0.01mm

主要特点:
- 移动框背面有连接孔，两头带支架，便于安装
- 任意位置清零，便于相对测量与绝对测量转换
- 带数据保持功能（量程≥500mm时）
- 带预置数功能（量程≥500mm时）
- 任意位置公制与英制转换

FEATURES:
- Screw holes and brackets are available for installing
- Zero-setting at any position, convenient for relative and absolute measure conversion
- Data hold (range ≥500mm)
- Preset any reading at any position (range ≥500mm)
- Mm/inch conversion at any position

货号 Code NO.	测量范围 Measuring Range mm	精度 Accuracy mm	L1 mm	L2 mm	a mm	b mm	c mm	d mm	e mm
812-100	0-100	±0.02	206	194	16	4	36	6	24
812-101	0-150	±0.03	256	244	16	4	36	6	24
812-102	0-200	±0.03	306	294	16	4	36	6	24
812-103	0-300	±0.04	436	424	16	4	36	6	24
812-104	0-400	±0.05	536	524	16	4	36	6	24
812-105	0-500	±0.05	670	654	24	5.5	45	8	32
812-106	0-600	±0.08	770	754	24	5.5	45	8	32
812-107	0-700	±0.08	870	854	24	5.5	45	8	32
812-108	0-800	±0.10	970	954	24	5.5	45	8	32
812-109	0-900	±0.10	1070	1054	24	5.5	45	8	32
812-110	0-1000	±0.10	1224	1204	31	10.5	60	10	40
812-112	0-1200	±0.12	1424	1404	31	10.5	60	10	40
812-115	0-1500	±0.14	1724	1704	31	10.5	60	10	40
812-120	0-2000	±0.20	2224	2204	31	10.5	60	10	40

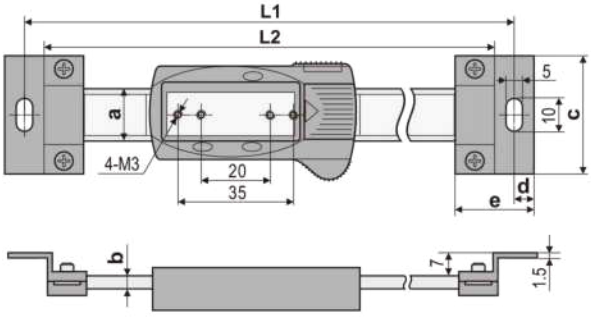

竖式数显标尺
Digital Scale Units(V-Type)

GB/T | S/STL hardened | SPC 既福祖口

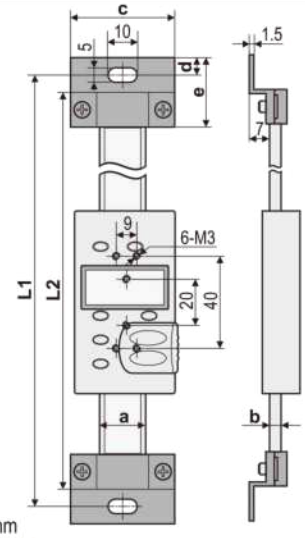

分辨力:0.01mm
Resolution:0.01mm
低电压报警
Low voltage alarm

可转向读数竖式标尺
Bidirectional Reading Digital Scale Unit

货号 Code NO.	测量范围 Measuring Range mm	精度 Accuracy mm
812-201-40	0-150	±0.03
812-202-40	0-200	±0.03
812-203-40	0-300	±0.04
812-204-40	0-400	±0.05

货号 Code NO.	测量范围 Measuring Range mm	精度 Accuracy mm	L1 mm	L2 mm	a mm	b mm	c mm	d mm	e mm
812-200G	0-100	±0.02	236	224	20	4	40	6	24
812-201G	0-150	±0.03	286	274	20	4	40	6	24
812-202G	0-200	±0.03	336	324	20	4	40	6	24
812-203G	0-300	±0.04	436	424	20	4	40	6	24
812-204G	0-400	±0.05	536	524	20	4	40	6	24
812-205G	0-500	±0.05	670	654	24	5.5	45	8	32
812-206G	0-600	±0.08	770	754	24	5.5	45	8	32
812-207G	0-700	±0.08	870	854	24	5.5	45	8	32
812-208G	0-800	±0.10	970	954	24	5.5	45	8	32
812-209G	0-900	±0.10	1070	1054	24	5.5	45	8	32
812-210G	0-1000	±0.10	1224	1204	31	10.5	60	10	40
812-212G	0-1200	±0.12	1424	1404	31	10.5	60	10	40
812-215G	0-1500	±0.14	1724	1704	31	10.5	60	10	40
812-220G	0-2000	±0.20	2224	2204	31	10.5	60	10	40

主要特点:
- 移动框背面有连接孔，两头带支架，便于安装
- 任意位置清零，便于相对测量与绝对测量转换
- 带数据保持功能
- 带预置数功能
- 任意位置公制与英制转换

FEATURES:
- Screw holes and brackets are available for installing
- Zero-setting at any position, convenient for relative and absolute measure conversion
- Data hold
- Preset any reading at any position
- Mm/inch conversion at any position

J

刀口尺
Knife Straight Edge

GB/T S/STL hardened

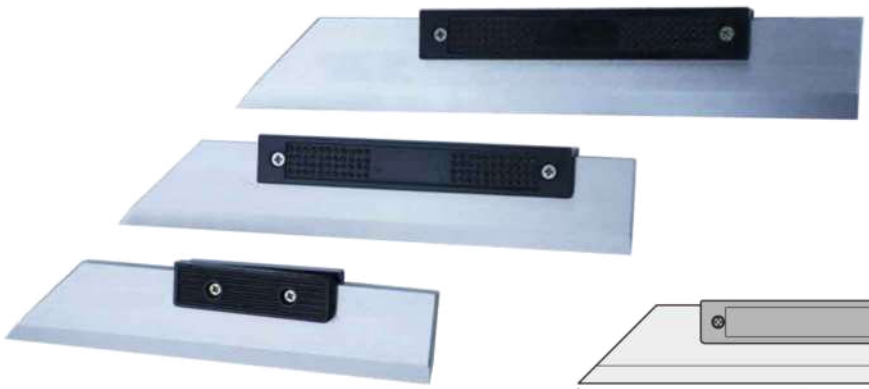

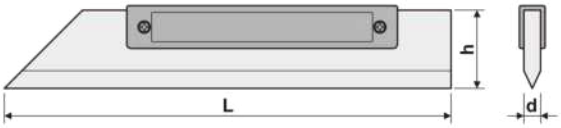

主要特点:
- 整体淬硬的不锈钢制成
- 用于测量工件平面形状的误差，比如直线度和平面度
- 工作面为圆弧形刃口
- 稳定、退磁处理

FEATURES:
- Made of integrally hardened stainless steel
- Used to measure the error of workpiece plane shape, such as straightness and flatness
- The working surface is circular arc edge
- Stabilization and demagnetization

货 号 Code NO.	规 格 L/mm	h mm	d mm	执行标准
512-100	75	22	6	GB/T6091-2022 精度等级：0级
512-100-1	100	25	6	
512-101	125	25	6	
512-101-1	175	28	6.5	
512-102	200	38	7.5	
512-102-1	225	38	7.5	
512-103	300	38	7.5	
512-104	400	45	7.5	
512-105	500	50	7.5	
512-106	600	60	7.5	Q/GGSC 450323502-2021
512-108	800	80	8	
512-110	1000	80	8	

刀口形直角尺
Edged Square

GB/T S/STL hardened

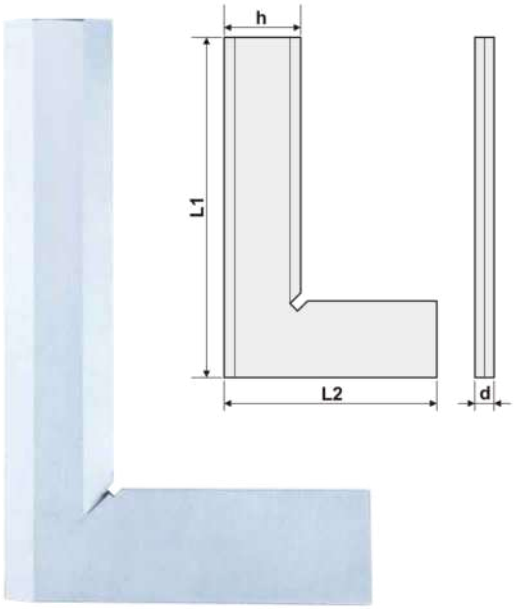

主要特点:
- 整体淬硬的不锈钢制成
- 用于测量工件的垂直度
- 工作面为圆弧形刃口
- 稳定、退磁处理

FEATURES:
- Made of integrally hardened stainless steel
- Used to measure the perpendicularity of the workpiece
- The working surface is circular arc edge
- Stabilization and demagnetization

货 号 Code NO.	规 格 L1*L2(mm)	h mm	d mm	执行标准
412-101	50*32	14	3.8	GB/T6092-2021 精度等级：0级
412-101-1	63*40	16	3.8	
412-101-2	80*50	18	4.5	
412-102	100*63	20	5	
412-102-1	125*80	24	5	
412-103	160*100	30	6.8	
412-104	200*125	30	6.8	
412-105	250*160	40	7.8	Q/GGSC 450323401-2021
412-106	300*200	40	7.8	

宽座直角尺
Wide-stand Square

GB/T | S/STL hardened

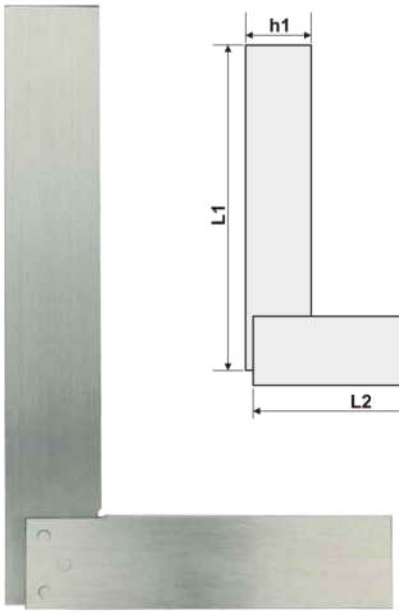

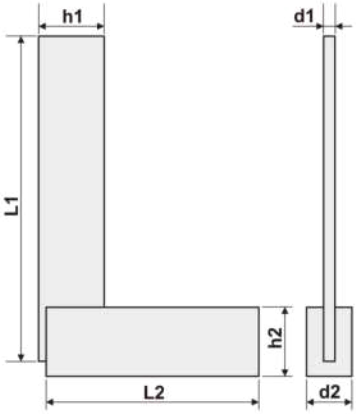

主要特点:
- 整体淬硬的不锈钢制成
- 用于测量工件的垂直度
- 工作面为小平面，底座较宽
- 稳定、退磁处理

FEATURES:
- Made of integrally hardened stainless steel
- Used to measure the perpendicularity of the workpiece
- The working face is a small plane and the base is wide
- Stabilization and demagnetization

货 号 Code NO.	规 格 L1*L2(mm)	h1 mm	h2 mm	d1 mm	d2 mm	执行标准
413-501	63*40	16	16	2	11	GB/T6092-2021 精度等级：0级
413-502	80*50	18	18	2	12	
413-503	100*63	20	20	2.5	12	
413-504	125*80	22	22	2.5	12	
413-505	160*100	25	25	3	16	
413-506	200*125	28	28	3	16	
413-507	250*160	35	35	3.8	20	
413-508	315*200	35	35	3.8	20	
413-509	400*250	46	46	4.8	25	
413-510	500*315	46	46	4.8	25	
413-511	630*400	50	50	4.8	25	
413-512	800*500	78	78	6.8	28	
413-513	1000*630	78	78	6.8	28	

双头圆柱塞规
Double-head Cylindrical Plug Gauge

主要特点:
- 用于测量工件内圆尺寸的精密量具
- 材质有普通（GCr15）,合金

FEATURES:
- Precision measuring tool for measuring the inner diameter of workpiece
- The material is common(GCr15), alloy

货 号 Code NO.	规 格 Range mm	精度 Accuracy mm
023-1Axxx	1.5~2.9	国家标准 H7
023-1Axxx	3~6	
023-1Axxx	6.1~14.9	
023-1Axxx	15~18	
023-1Axxx	18.1~24	
023-1Axxx	24.1~30	
023-1Axxx	30.1~38	
023-1Axxx	38.1~44	
023-1Axxx	44.1~50	
023-1Axxx	50.1~55	

货 号 Code NO.	规 格 Range mm	精度 Accuracy mm
023-1Axxx	55.1~60	国家标准 H7
023-1Axxx	60.1~70	
023-1Axxx	70.1~75	
023-1Axxx	75.1~80	
023-1Axxx	80.1~85	
023-1Axxx	85.1~90	
023-1Axxx	90.1~95	
023-1Axxx	95.1~100	
023-1Axxx	50.1~55	

光滑校对环规
Smooth Check Ring Gauge

主要特点:
- 用于校正、检验内径百分表的精密量具
- 材质有普通镀铬，合金
- 硬度为HRC58-62°

FEATURES:
- Precision measuring tool for calibrating and inspecting the inner diameter dial gauge
- Material: ordinary chrome plating, alloy
- Hardness: HRC58-62°

货 号 Code NO.	规 格 Range mm	精度 Accuracy mm
023-3Axxx	6~9	±0.002
023-3Axxx	10~13	±0.002
023-3Axxx	14~17	±0.002
023-3Axxx	18~23	±0.002
023-3Axxx	24~29	±0.002
023-3Axxx	30~39	±0.002
023-3Axxx	40~49	±0.002
023-3Axxx	50~64	±0.002
023-3Axxx	65~79	±0.002
023-3Axxx	80~99	±0.002
023-3Axxx	100~109	±0.002
023-3Axxx	110~119	±0.002
023-3Axxx	120~129	±0.002
023-3Axxx	130~139	±0.002
023-3Axxx	140~149	±0.002
023-3Axxx	150~159	±0.002
023-3Axxx	160~169	±0.002
023-3Axxx	170~179	±0.002
023-3Axxx	180~189	±0.002
023-3Axxx	190~199	±0.002
023-3Axxx	200~229	±0.002

货 号 Code NO.	规 格 Range mm	精度 Accuracy mm
023-3AxxxH	6~9	±0.002
023-3AxxxH	10~13	±0.002
023-3AxxxH	14~17	±0.002
023-3AxxxH	18~23	±0.002
023-3AxxxH	24~29	±0.002
023-3AxxxH	30~39	±0.002
023-3AxxxH	40~49	±0.002
023-3AxxxH	50~64	±0.002
023-3AxxxH	65~79	±0.002
023-3AxxxH	80~99	±0.002
023-3AxxxH	100~109	±0.002
023-3AxxxH	110~119	±0.002
023-3AxxxH	120~129	±0.002
023-3AxxxH	130~139	±0.002
023-3AxxxH	140~149	±0.002
023-3AxxxH	150~159	±0.002
023-3AxxxH	160~169	±0.002
023-3AxxxH	170~179	±0.002
023-3AxxxH	180~189	±0.002
023-3AxxxH	190~199	±0.002
023-3AxxxH	200~229	±0.002

步距规
Check Master

陶瓷
Ceramic

主要特点：
- 用于现场校对激光干涉仪，提高其测量准确度
- 用于现场检测坐标测量机、数控机床和影像测量仪等装备的定位精度
- 可对测量范围在1500mm以下的量块进行水平和垂直定位检测
- 量块由陶瓷制成，尺寸和品质不会随使用时间而发生变化
- 符合国家机械行业标准JB/T10977-2010

FEATURES
- Laser interferometer calibration
- CMMs, CNC Machine and Image Measuring Instrument accuracy checking
- Horizontally and vertically blocks checking once the range within 1500mm
- With ceramic blocks, measuring surfaces no need antiseptic treatment
- In accordance with JB/T10977-2010

卡尺检测规 Check Master

卡尺检测规用于检测、校准各种游标、带表、数显卡尺示值。由一组永久固定在保护铸件内的高精度量块组成。
卡尺检测规也能垂直放置，用于高度检测。量块可选择钢、硬质合金、陶瓷三种材料，品质和尺寸不会随使用时间而发生变化。
Used for testing and calibrating Vernier, Dial and Digital Caliper. Consists of a group of high precision gauges permanently fixed in the protection of casting. Can be used for height measurement. Steel, carbide alloy, ceramic materials for optional. The quality and size does not change with time.

货 号 Code NO.	规 格 Range mm	级 别 Grade	极限误差 Permissible Error um	平行度 Parallelism um
022A-A300	300	0	±1.0	0.6
022A-A400	400	0	±1.3	0.7
022A-A500	500	0	±1.8	0.8
022A-A600	600	0	±2.2	1.0
022A-A700	700	0	±2.5	1.4
022A-A800	800	0	±2.8	1.4
022A-A1000	1000	0	±3.5	1.8
022A-A1500	1500	0	±6.5	2.5
022A-B300	300	1	±1.8	1.3
022A-B400	400	1	±2.0	1.4
022A-B500	500	1	±2.5	1.5
022A-B600	600	1	±2.8	1.6
022A-B700	700	1	±3.5	2.0
022A-B800	800	1	±4.0	2.0
022A-B1000	1000	1	±5.0	2.5
022A-B1500	1500	1	±8.0	3.2

货 号 Code NO.	规 格 Range mm	极限误差 Permissible Error um	平行度 Parallelism um
025A-C300	300	±4.0	1
025A-C600	600	±5.0	2
025A-C1000	1000	±8.0	2.5

量块
Gauge Block

GB/T

如需订购合金量块，请在原货号后加C;
If you want Carbide Type, Please add C to the item NO.

J

卡尺专用 For Calipers

货号(1级) Code NO. Grade1	测量范围 Measuring Range	数 量 Quantity	包含规格 Included Size
014A-B300	0-300mm	11	10, 20, 20, 28.3, 51.5, 70, 101.2, 149.8, 191.8, 201.5, 291.8
014A-B500	0-500mm	6	80, 161.2, 240, 321.5, 400, 491.8

千分尺专用 For Micrometers

货号(0级) Code NO. Grade 0	货号(1级) Code NO. Grade 1	测量范围 Measuring Range	数 量 Quantity	包含规格 Included Size
014B-A010	014B-B010	0-10mm	5	2.12, 4.25, 6.37, 8.5, 10
014B-A015	014B-B015	0-15mm	5	3.12, 6.25, 9.37, 12.5, 15
014B-A025	014B-B025	0-25mm	5	5.12, 7.00, 10.25, 15.3, 20.5, 25
014B-A050	014B-B050	25-50mm	5	30.12, 35.25, 40.37, 45.5, 50
014B-A075	014B-B075	50-75mm	5	55.12, 60.25, 65.37, 70.5, 75
014B-A0100	014B-B100	75-100mm	5	80.12, 85.25, 90.37, 95.5, 100

任意点长度极限偏差 Limit Deviation of length at any point
长度变化公差 Tolerance of varation in length

量块长度 Range mm	0级Grade 0		1级Grade 1	
	任意点长度极限偏差 um	长度变化公差 um	任意点长度极限偏差 um	长度变化公差 um
0.5≤L≤10	±0.12	0.10	±0.20	0.16
10<L≤25	±0.14	0.10	±0.30	0.16
25<L≤50	±0.20	0.10	±0.40	0.18
50<L≤75	±0.25	0.12	±0.50	0.18
75<L≤100	±0.30	0.12	±0.60	0.20
100<L≤150	±0.40	0.14	±0.80	0.20
150<L≤200	±0.50	0.16	±1.00	0.25
200<L≤250	±0.60	0.16	±1.20	0.25
250<L≤300	±0.70	0.18	±1.40	0.25
300<L≤400	±0.90	0.20	±1.80	0.30
400<L≤500	±1.10	0.25	±2.20	0.35
500<L≤600	±1.30	0.25	±2.60	0.40
600<L≤700	±1.50	0.30	±3.00	0.45
700<L≤800	±1.70	0.30	±3.40	0.50
800<L≤900	±1.90	0.35	±3.80	0.50
900<L≤1000	±2.00	0.40	±4.20	0.60

此页未完转下页 To be continued

单个量块 Single Block

货号(0级) Code NO. (Grade 0)	货号(1级) Code NO. (Grade 1)	规格 Range
011A-A0D5	011A-B0D5	0.5
011A-A0D991	011A-B0D991	0.991
011A-A0D992	011A-B0D992	0.992
011A-A0D993	011A-B0D993	0.993
011A-A0D994	011A-B0D994	0.994
011A-A0D995	011A-B0D995	0.995
011A-A0D996	011A-B0D996	0.996
011A-A0D997	011A-B0D997	0.997
011A-A0D998	011A-B0D998	0.998
011A-A0D999	011A-B0D999	0.999
011A-A1	011A-B1	1
011A-A1D001	011A-B1D001	1.001
011A-A1D002	011A-B1D002	1.002
011A-A1D003	011A-B1D003	1.003
011A-A1D004	011A-B1D004	1.004
011A-A1D005	011A-B1D005	1.005
011A-A1D006	011A-B1D006	1.006
011A-A1D007	011A-B1D007	1.007
011A-A1D008	011A-B1D008	1.008
011A-A1D009	011A-B1D009	1.009
011A-A1D01	011A-B1D01	1.01
011A-A1D02	011A-B1D02	1.02
011A-A1D03	011A-B1D03	1.03
011A-A1D04	011A-B1D04	1.04
011A-A1D05	011A-B1D05	1.05
011A-A1D06	011A-B1D06	1.06
011A-A1D07	011A-B1D07	1.07
011A-A1D08	011A-B1D08	1.08
011A-A1D09	011A-B1D09	1.09
011A-A1D1	011A-B1D1	1.10
011A-A1D11	011A-B1D11	1.11
011A-A1D12	011A-B1D12	1.12
011A-A1D13	011A-B1D13	1.13
011A-A1D14	011A-B1D14	1.14
011A-A1D15	011A-B1D15	1.15
011A-A1D16	011A-B1D16	1.16
011A-A1D17	011A-B1D17	1.17

货号(0级) Code NO. (Grade 0)	货号(1级) Code NO. (Grade 1)	规格 Range
011A-A1D18	011A-B1D18	1.18
011A-A1D19	011A-B1D19	1.19
011A-A1D2	011A-B1D2	1.20
011A-A1D21	011A-B1D21	1.21
011A-A1D22	011A-B1D22	1.22
011A-A1D23	011A-B1D23	1.23
011A-A1D24	011A-B1D24	1.24
011A-A1D25	011A-B1D25	1.25
011A-A1D26	011A-B1D26	1.26
011A-A1D27	011A-B1D27	1.27
011A-A1D28	011A-B1D28	1.28
011A-A1D29	011A-B1D29	1.29
011A-A1D3	011A-B1D3	1.30
011A-A1D31	011A-B1D31	1.31
011A-A1D32	011A-B1D32	1.32
011A-A1D33	011A-B1D33	1.33
011A-A1D34	011A-B1D34	1.34
011A-A1D35	011A-B1D35	1.35
011A-A1D36	011A-B1D36	1.36
011A-A1D37	011A-B1D37	1.37
011A-A1D38	011A-B1D38	1.38
011A-A1D39	011A-B1D39	1.39
011A-A1D4	011A-B1D4	1.40
011A-A1D41	011A-B1D41	1.41
011A-A1D42	011A-B1D42	1.42
011A-A1D43	011A-B1D43	1.43
011A-A1D44	011A-B1D44	1.44
011A-A1D45	011A-B1D45	1.45
011A-A1D46	011A-B1D46	1.46
011A-A1D47	011A-B1D47	1.47
011A-A1D48	011A-B1D48	1.48
011A-A1D49	011A-B1D49	1.49
011A-A1D5	011A-B1D5	1.5
011A-A1D6	011A-B1D6	1.6
011A-A1D7	011A-B1D7	1.7
011A-A1D8	011A-B1D8	1.8
011A-A1D9	011A-B1D9	1.9

货号(0级) Code NO. (Grade 0)	货号(1级) Code NO. (Grade 1)	规格 Range
011A-A1D91	011A-B1D91	1.91
011A-A1D92	011A-B1D92	1.92
011A-A1D93	011A-B1D93	1.93
011A-A1D94	011A-B1D94	1.94
011A-A1D95	011A-B1D95	1.95
011A-A1D96	011A-B1D96	1.96
011A-A1D97	011A-B1D97	1.97
011A-A1D98	011A-B1D98	1.98
011A-A1D99	011A-B1D99	1.99
011A-A2	011A-B2	2
011A-A3	011A-B3	3
011A-A4	011A-B4	4
011A-A5	011A-B5	5
011A-A6	011A-B6	6
011A-A7	011A-B7	7
011A-A8	011A-B8	8
011A-A9	011A-B9	9
011A-A10	011A-B10	10
011A-A11	011A-B11	11
011A-A12	011A-B12	12
011A-A13	011A-B13	13
011A-A14	011A-B14	14
011A-A15	011A-B15	15
011A-A16	011A-B16	16
011A-A17	011A-B17	17
011A-A18	011A-B18	18
011A-A19	011A-B19	19
011A-A20	011A-B20	20
011A-A21	011A-B21	21
011A-A22	011A-B22	22
011A-A23	011A-B23	23
011A-A24	011A-B24	24
011A-A25	011A-B25	25
011A-A26	011A-B26	26
011A-A27	011A-B27	27
011A-A28	011A-B28	28
011A-A29	011A-B29	29

货号(0级) Code NO. (Grade 0)	货号(1级) Code NO. (Grade 1)	规格 Range
011A-A30	011A-B30	30
011A-A31	011A-B31	31
011A-A32	011A-B32	32
011A-A33	011A-B33	33
011A-A34	011A-B34	34
011A-A35	011A-B35	35
011A-A36	011A-B36	36
011A-A37	011A-B37	37
011A-A38	011A-B38	38
011A-A39	011A-B39	39
011A-A40	011A-B40	40
011A-A50	011A-B50	50
011A-A60	011A-B60	60
011A-A70	011A-B70	70
011A-A80	011A-B80	80
011A-A90	011A-B90	90
011A-A100	011A-B100	100
011A-A110	011A-B110	110
011A-A120	011A-B120	120
011A-A125	011A-B125	125
011A-A150	011A-B150	150
011A-A175	011A-B175	175
011A-A200	011A-B200	200
011A-A300	011A-B300	300
011A-A400	011A-B400	400
011A-A500	011A-B500	500
011A-A600	011A-B600	600
011A-A700	011A-B700	700
011A-A800	011A-B800	800
011A-A900	011A-B900	900
011A-A1000	011A-B1000	1000
011A-A1100	011A-B1100	1100
011A-A1200	011A-B1200	1200
011A-A1300	011A-B1300	1300
011A-A1400	011A-B1400	1400
011A-A1500	011A-B1500	1500

套装量块 Blocks Gruop

货号(0级) Code NO. (Grade 0)	货号(1级) Code NO. (Grade 1)	货号(2级) Code NO. (Grade 2)	每套数量 PCS/set	长度 Size mm	间隔 Step mm	数量 Quantity	备注 Remark
014A-A122	014A-B122	014A-C122	122	0.5	-	1	德国标准 DIN
				1	-	1	
				1.0005	-	1	
				1.001~1.009	0.001	9	
				1.01~1.49	0.01	49	
				1.5~1.9	0.1	5	
				2~25	0.5	47	
				30~100	10	8	
				75	-	1	
014A-A112	014A-B112	014A-C112	112	0.5	-	1	国际标准 ISO
				1	-	1	
				1.0005	-	1	
				1.001~1.009	0.001	9	
				1.01~1.49	0.01	49	
				1.5~25	0.5	48	
				50~100	25	3	
014A-A103	014A-B103	014A-C103	103	1.005	-	1	德国标准 DIN
				1.01~1.49	0.01	49	
				0.5~24.5	0.5	49	
				25~100	25	4	
014A-A091	014A-B091	014A-C091	91	0.5	-	1	国家标准 GB
				1	-	1	
				1.001~1.009	0.001	9	
				1.01~1.49	0.01	49	
				1.5~1.9	0.1	5	
				2~9.5	0.5	16	
				10~100	10	10	
014A-A088	014A-B088	014A-C088	88	0.5	-	1	国际标准 ISO
				1	-	1	
				1.005	-	1	
				1.001~1.009	0.001	9	
				1.01~1.49	0.01	49	
				1.5~9.5	0.5	17	
				10~100	10	10	
014A-A087	014A-B087	014A-C087	87	1.001~1.009	0.001	9	德国标准 DIN
				1.01~1.49	0.01	49	
				0.5~9.5	0.5	19	
				10~100	10	10	
				0.5	-	1	
				1	-	1	

货号(0级) Code NO. (Grade 0)	货号(1级) Code NO. (Grade 1)	货号(2级) Code NO. (Grade 2)	每套数量 PCS/set	长度 Size mm	间隔 Step mm	数量 Quantity	备注 Remark
014A-A083	014A-B083	014A-C083	83	1.005	-	1	国家标准 GB 国际标准 ISO
				1.01~1.49	0.01	49	
				1.5~1.9	0.1	5	
				2~9.5	0.5	16	
				10~100	10	10	
014A-A047	014A-B047	014A-C047	47	1.005	-	1	德国标准 DIN
				1.01~1.2	0.01	20	
				1.3~1.9	0.1	7	
				1~9	1	9	
				10~100	10	10	
014A-A046	014A-B046	014A-C046	46	1	-	1	国家标准 GB 国际标准 ISO
				1.001~1.009	0.001	9	
				1.01~1.09	0.01	9	
				1.1~1.9	0.1	9	
				2~9	1	8	
				10~100	10	10	
014A-A038	014A-B038	014A-C038	38	1	-	1	国家标准 GB 国际标准 ISO
				1.005	-	1	
				1.01~1.09	0.01	9	
				1.1~1. 9	0.1	9	
				2~9	1	8	
				10~100	10	10	
014A-A032	014A-B032	014A-C032	32	1.005	-	1	德国标准 DIN
				1.01~1.09	0.01	9	
				1.1~1.9	0.1	9	
				1~9	1	9	
				10~30	10	3	
				50	-	1	
014A-A010	014A-B010	014A-C010	10	1.00~1.09	0. 01	10	国家标准 GB 国际标准 ISO
014A-A010A	014A-B010A	014A-C010A	10	0.991~1.000	0.001	10	
014A-A010B	014A-B010B	014A-C010B	10	1.000~1.009	0.001	10	
014A-A008	014A-B008	014A-C008	8	125~175	25	3	
				200~250	50	2	
				300~500	100	3	
014A-A005	014A-B005	014A-C005	5	600~1000	100	5	
014A-A004	014A-B004	014A-C004	4	1	-	2	
				1.5	-	2	
014A-A004A	014A-B004A	014A-C004A	4	1.5	-	2	
				2	-	2	

J

电感位移传感器
Inductance Transducer

主要特点:
- 用于对被测件的尺寸、形状和位置误差进行精密测
- 完全兼容TESA标准和显示仪

FEATURES:
- Used for checking the measurement error of the size, shape and position of the workpiece
- Fully compatible with TESA standards and displays

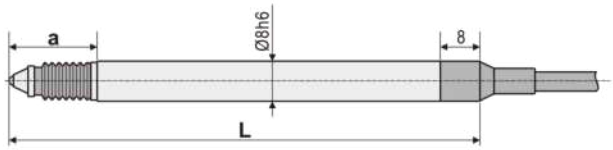

货 号 Code NO.	测量范围 Measuring Range mm	总行程 Total Bolt mm	前行程 Front Bolt mm	测 力 Measuring Force N	线性误差 Linearity Error mm	重复性误差 Repeatability Error um	L mm	a mm
874-102	±0.5	2	0.6-0.7	0.45-0.65	±0.3%	0.03	97	17
874-104	±1.0	3	1.1-1.3	0.55-0.75	±0.3%	0.15	97	17
874-105	±2.0	6	2.1-2.3	0.4-0.7	±0.6%	0.2	101	20

测量台架
Measuring Stand

主要特点:
- 花岗岩平台
- 测量臂可精密微调
- 夹持量表的孔径Ø8mm

FEATURES:
- Granite measuring table
- Fine adjustment in measuring arm
- Clamping bore's dia. Ø8mm

货 号 Code NO.	测量范围 Measuring Range mm	测 量 面 Measuring Set mm	平面度 Flatness μm	L mm	a mm	b mm	c mm	d mm	e mm
723-530	0-130	150X100	2.0	150	40	180	Ø22	121	75
723-530A	0-200	200X150	2.5	200	50	250	Ø30	130	95
723-530B	0-250	300X200	3.0	300	50	300	Ø35	152.5	115
723-530C	0-130	80X80(陶瓷)	1.5	146	29	180	Ø22	121	64
723-530D	0-130	80X80(淬火钢)	1.5	149	29	180	Ø22	121	64


723-530C


723-530D

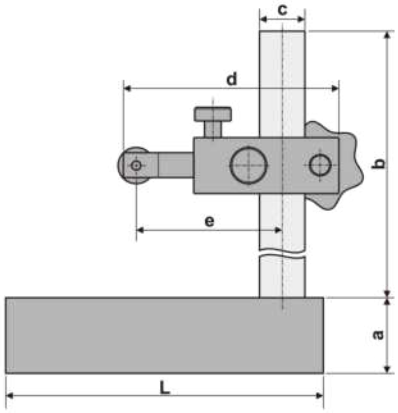

J